DOCUMENT DATA FORM

Your Name: Nick Carl

WTCI-1042-LERA

Document Title or Description (max. 254 characters): Circle: Same as cover (or fill in below)

Drawing book 12 - Beam and Girder Details

Include work order no. and floor no. if applicable

Roll # DB02	Doc. ID (report #, dwg. #):	
Document Date: 1968-69	Document Author Name:	Author Organization: SH&R

KEYWORDS – HIGHLIGHT ALL THAT APPLY

Level 1

Bankers Trust	Project 4	WTC 1 - North Tower	Add
Below Grade	Project 5	WTC 2 - South Tower	
Concourse	Project 6	WTC 3 - Marriot Hotel	
Electrical Substation	Project 7	WTC 4 - South Plaza Bldg.	
Liberty Plaza	Project 8	WTC 5 - North Plaza Bldg	
PATH Station	WFC 1 - Oppenhiemer Dow	WTC 6 - Customs House	
PATH Terminal	WFC 2 - Tower B	WTC 7	
Project 1	WFC 3 - American Express	WTC Complex	
Project 2	WFC 4 - Tower D	WTC Plaza	
Project 3			

Level 2

Accident analysis & risk	Fire protection	Misc. Performance Problems	Structural
Architectural	Fire service	News coverage	Tenant alterations
Data request	Landscaping	Police	Tenant Space
Emergency management	Management	Security	Add
Evacuation	Mech./elec.		

Level 3

1993 explosion	Cranes	Frame	Roof	Weight
A/E fitout	Criteria	Frame analysis	Safety	Weld detail
A-242	Dampers	Frequency	Schedule	Weld size
A-36	Debris	Fuel	Sculpture	Welding
A-497	Deck	Furniture layout	Security system	Wind
Aircraft impact	Deflection	Generators	Shear knuckle	Windows
Air cooled condensers	Demolition	Guidelines	Shear test	Yield strength
Analysis	Design	Gypsum board	Shear Stud	Add
Angles	Detailing	Hat truss	Shop drawings	
Antenna	Doors	Human comfort	Shortening	drawing book
Artifacts	Drawings	HVAC	Slab	
Asbestos	Eastern States Steel	Index	Slurry wall	
Base plate	Egress	Inspection	Smoke control	
Beams	Elevator	Insulation	Smoke test	
Bid documents	Elevator Shaft	Job number	Spandrel beam	
Bid Invitation	Emergency communications	Joist	Specifications	
Bow tie	Equipment	L-50	Splices	
Bracing	Erection marks	Lighting	Sprinkler	
Bridging truss	Errors & Omissions	Loads	Stability	
Building code	Escalator	Maintenance	Stairways	
Calculations	Expansion joint	Marking	Standards	
Carpet	Exterior columns	Mesh reinforcement	Steel	
Ceilings	Fabrication	Mill inspection	Steel composition	
Certification	Family member	Model	Stiffness	
Chillers	Field survey	Mullion	Structural review	
Cladding	Fire alarms	Operations	Surveillance	
Collapse	Fireproofing	Paint	Survey	
Columns	Fire spread	Partition layout	Survivor	
Communication systems	Fire testing	Partitions	Tenant list	
Composite truss	Firetower	Photos	Tenant occupancy	
Computer output	Flag Pole	Pipes	Testing	
Computer program	Flammability	Plumbing	Tie	
Concrete	Floor	Prestressing	Tolerances	
Connections	Floor load	Probability, uncertainty	Transfer Girders	
Construction	Floor slab	Quality control	Triad	
Contract	Floor system	Ramp	Truss	
Core beams	Floor trusses	Reinforcing (strengthening)	Vestibule	
Core columns	Formwork	Renovation	Vibration	
Corrosion	Foundations	Repair	Walls	
Cracking	Fracture	Research & Development	Water supply	
			Weather	

WTCI-1042-LERA

BOOK 12

SEPARATOR BEAM

STUD SHEAR [illegible]

GIRDER DOME

SKILLING - HELLE - CHRISTIANSEN - ROBERTSON Structural & Civil Engineers

PROJECT	TITLE	DATE
THE WORLD TRADE CENTER	DRAWING INDEX	7/19/68

REVISIONS	DRAWING NO. BOOK 12	TITLE
9- 4-68	12-JK2-2 thru 5	Typical Beam Details
9-13-68	12-JK2-8 thru 19A	Schedule for Shear Connectors
9-20-68	12-JK2-20	Shear Stud Connector Table Format
10-15-68	12-JK2-21 thru 31	Shear Stud Connector Tables
11- 5-68	12-JK2-49	Beam & Girder Details - Sprinkler Pipe Holes
11-11-68	12-JK2-50 thru 103, 111 thru 149	Girder Details
11-27-68	12-JK2-104	Plate Girder Welding Schedule
12- 3-68	12-JK2-152	Detail of Plate Girder
12-17-68	12-JK2-153 & 154	Detail of Beams Adjacent to Stairway
1- 3-69	12-JK2-155 & 156	Detail of Plate Girder
1- 8-69	12-JK2-157 thru 159A	Temporary Structure
1-13-69	12-JK2-160	Girder Detail
2- 3-69	12-JK2-161 thru 164	Beam Details
3- 3-69	12-JK2-165 thru 175	Detail of Plate Girder
3-12-69	12-JK2-199	Detail for Notching Beam already in Place
3-18-69	12-JK3-2 thru 13	Construction Joint Details
3-21-69	12-JK3-50 thru 59	Utility Supports Along East Perimeter Wall
4- 1-69	12-JK4-2 & 3	Moment Connection Schedule at El. 332
5- 1-69	12-JK4-4	Girder to Col. Flange & Web Moment Conn. Detail
	12-JK4-5 & 6	Beam Connection Detail to Tower (El. 332)
	12-JK4-9 & 10	Beam to Column Connection
	12-JK4-15 & 16	Connection Detail for Col. J14-7 (El. 332)
	12-JK5-1 thru 11	Beam Connections to Slurry Wall

LICENSED PROFESSIONAL ENGINEER
LESLIE E. ROBERTSON
No. 34360
UNIVERSITY OF THE STATE OF NEW YORK

12-JK1-0.1

SKILLING, HELLE, CHRISTIANSEN, ROBERTSON — Structural & Civil Engineers

PROJECT: THE WORLD TRADE CENTER | TITLE: BEAM CONNECTIONS TO SLURRY WALL-SCHEDULE II | DATE: 3-19-69

REVISIONS
5-29-69
11-3-69
12-11-69

FIELD CONNECTION DATA

Conn. Det.	Steel Beam: Plan	Size	Elev.	Coord.	Detail Material: Angle A	R B	Weld C	Weld D	Dim. E
G1	SJ-76	33WF118	289'-3"	N5027.50	See 12-JK5-10				
		33WF118	289'-3"	N5023.50	See 12-JK5-10				
C6	SJ-77	30WF210 +2PL20x2	289'-10"	N4868±	2⌊L5x5x⅝x2'-0"*	40x3/4	9/16	11/16	1/2
		27WF177							
C7		30WF210 +2PL16x2x1/2	289'-5"	N4828±	2⌊L5x3½x⅝x2'-0"		1/2		1/2
		30WF210 +2PL12x1	289'-10"	N4809±	2⌊L5x3x⅝x2'-0"	30x3/4	9/16	1/2	1/2
C8	SJ-77	24WF160 +2PL20x1 3/4	289'-5"	N4780±	2⌊L5x5x⅝x1'-6"*	30x⅝	1/2	1/2	1/2
C9	SK-78	24WF160 +2PL20x1 3/4	289'-5"	N4752±	2⌊L5x5x⅝x1'-6"*	30x3/4	1/2	1/2	1/2
C10		24WF160 +2PL20x1 3/4	289'-5"	N4724±	2⌊L5x5x⅝x1'-6"*	24x1¼	1/2	1/2	1/2
C11		24WF160 +2PL20x1 3/4	289'-5"	N4696±	2⌊L5x5x⅝x1'-6"*	24x1¼	1/2	1/2	1/2
C12		24WF160 +2PL20x1 3/4	289'-5"	N4667±	2⌊L5x5x⅝x1'-6"*	30x3/4	1/2	1/2	1/2
C13		24WF160 +2PL20x1 3/4	289'-5"	N4638±	2⌊L5x5x⅝x1'-6"*	30x3/4	1/2	5/8	1/2
C14		24WF160 +2PL20x1 3/4	289'-5"	N4610±	2⌊L5x5x⅝x1'-6"*	24x1¼	1/2	1/2	1/2
C15	SK-78	24WF160 +2PL20x1 3/4	289'-5"	N4582±	2⌊L5x5x⅝x1'-6"*	30x3/4	1/2	5/8	1/2
B2	SK-88	36WF230 +2PL20x1 3/4	293'-8"	N4569.67	2⌊L5x3x7/16x2'-0"	20x2	3/8	9/16	3

BEAM SUPPORT DATA

PNYA Desig.	Coordinates: North	West	Center Elev.	Deviations (in.): Tilt	Lean	Twist
G9N(Top)	5028.91	9833.41	287.71	0.06	0.16	0
G9S(Top)	5025.01	9832.51	287.82	0.12	0.04	0
G16	4870.70	9797.05				
G17	4867.02	9796.31				
G18	[illegible]	[illegible]	To be determined			
G19	4810.28	9782.29				
G20	4807.51	9781.14				
G21N	4782.59	9772.92	288.27	0	0.18	0
G21S	4778.76	9771.72	288.37	-0.16	0.10	0
G22(Top)	4753.48	9763.82	287.87	0	0	0
G23(Top)	4748.31	9761.86	288.26	0	0.06	0
G24N(Top)	4725.91	9754.29	288.19	-0.34	0.04	0
G24S(Top)	4721.90	9753.03	288.27	0.04	0.08	0
G25N	4698.17	9745.11	289.32	-0.10	-0.12	0
G25S	4694.36	9743.91	288.24	-0.12	-0.14	0
G27N	4668.35	9735.98	288.29	0.06	0	-0.30
G27S	4664.24	9734.74	288.35	0.04	0	0
G28N	4641.21	9726.77	288.22	0	0	0
G28S	4637.51	9725.43	288.40	0	0	0
G30N	4612.21	9717.30	287.66	0	0	0
G30S	4608.49	9715.98	287.86	-0.04	-0.06	0
G31N	4582.28	9707.30	288.43	0.16	0.04	0
G31S	4578.37	9706.16	288.52	0.24	0.08	0
G32N	4568.08	9702.66	292.05	-0.06	0.04	0
G32S	4564.03	9701.46	292.07	-0.04	0.04	0

1. * — Slot ⊥ per 12-JK5-6
2. See notes on 12-JK5-1
3. See details on 12-JK5-4 thru 11.

LICENSED PROFESSIONAL ENGINEER — LESLIE E. ROBERTSON — No. 34360 — UNIVERSITY OF THE STATE OF NEW YORK

DESIGNED: C.M.
DRAWN: A.L.FRANOJI
REVIEWED: E.L.

12-JK5-3

SKILLING. HELLE. CHRISTIANSEN. ROBERTSON — Structural & Civil Engineers

PROJECT: THE WORLD TRADE CENTER | TITLE: BEAM CONNECTIONS TO SLURRY WALL-DETAIL A | DATE: 3-19-69

REVISIONS
5-29-69

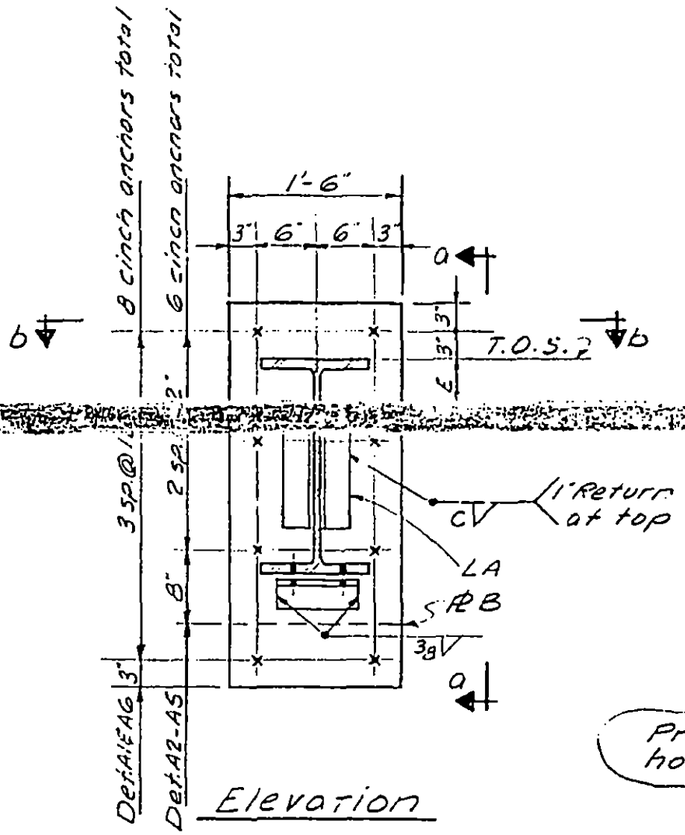

Elevation

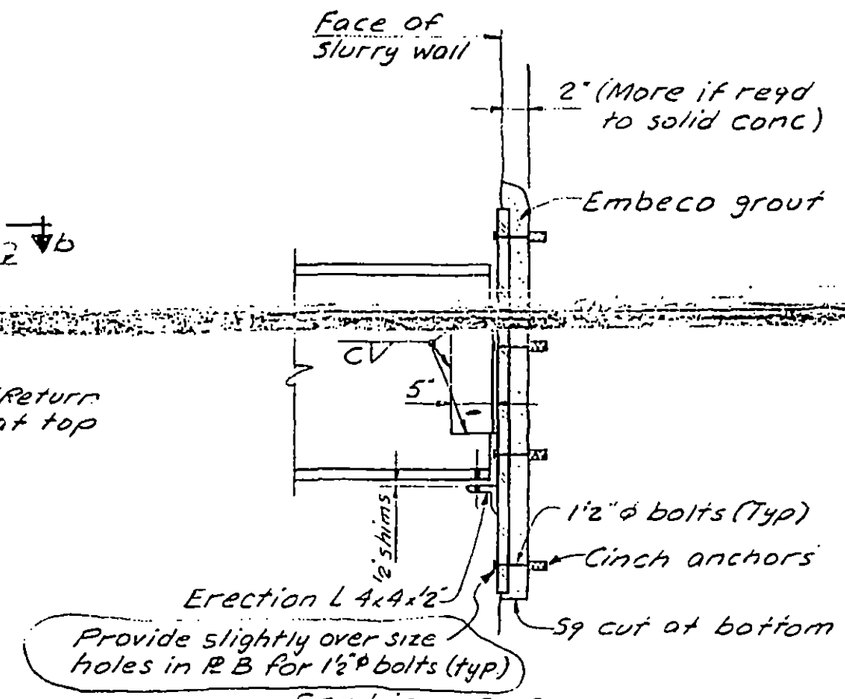

Section a-a

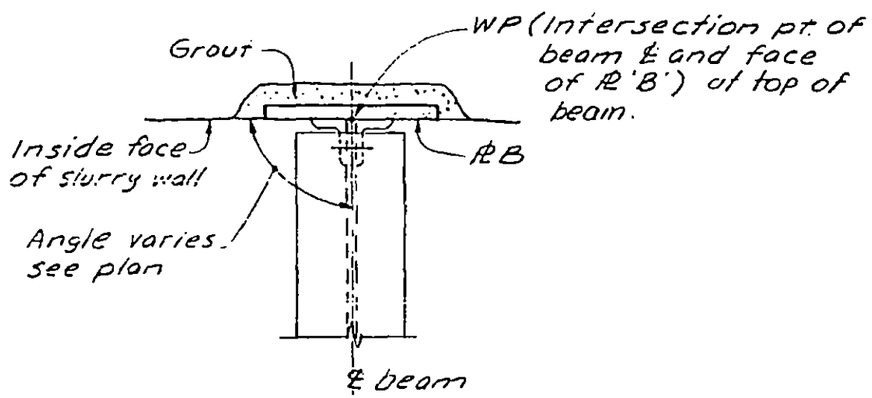

Section b-b

Notes:
1. See notes on 12-JK5-1

LICENSED PROFESSIONAL ENGINEER — LESLIE E. ROBERTSON — No 34360 — UNIVERSITY OF THE STATE OF NEW YORK

DESIGNED: J.H.
A.L. FRANQUI
REVIEWED: E.L.

12-JK5-4

SKILLING, HELLE, CHRISTIANSEN, ROBERTSON — Structural & Civil Engineers

PROJECT: THE WORLD TRADE CENTER | TITLE: BEAM CONNECTIONS TO SLURRY WALL - DETAIL B | DATE: 3-19-69

REVISIONS

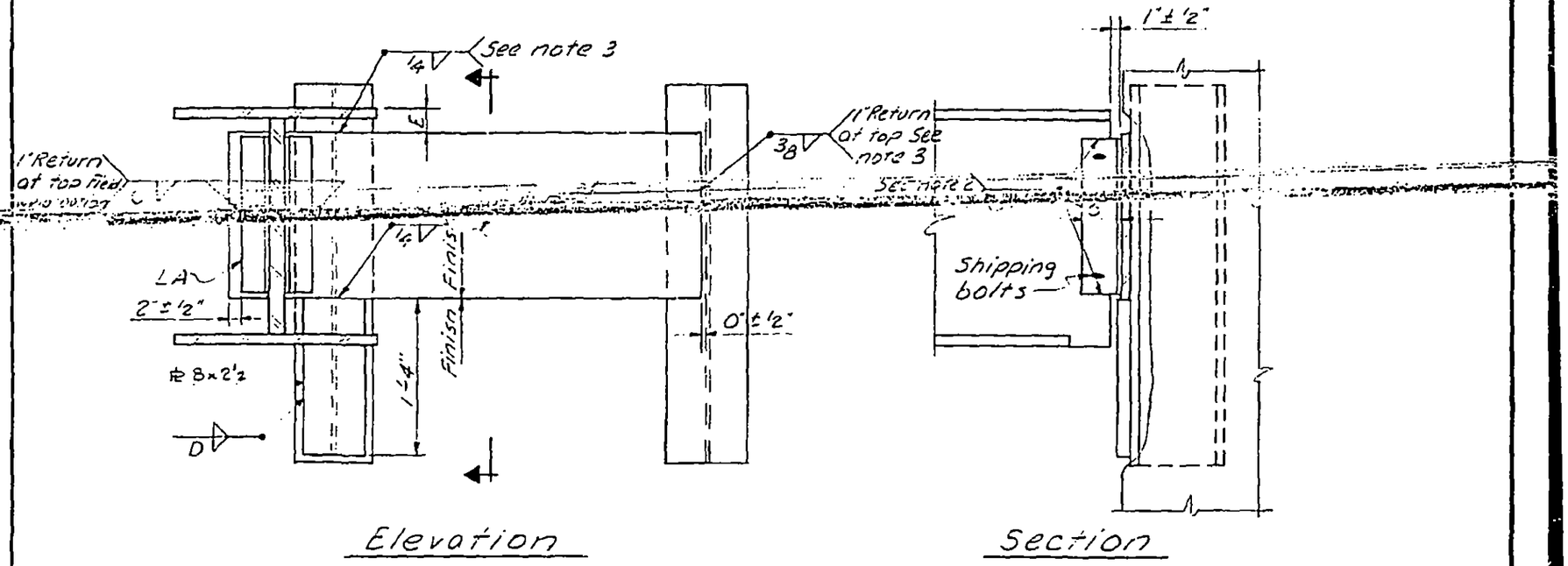

Elevation

Section

Notes:

1. See notes on 12-JK5-1
2. If erection clearance is allowed between beam web & connection angles, size of weld has to be increased by the dimension of this gap. (Max clearance = 1/8")
3. Due to the deviation of exist. beam supports, the weld size shown has to be increased by the dimension of the gap between PL and sup't. In no case should this gap be greater than 1/8".

LICENSED PROFESSIONAL ENGINEER — LESLIE E. ROBERTSON — No 34380 — UNIVERSITY OF THE STATE OF NEW YORK

DESIGNED: J.H.

A.L. FRANGUI

REVIEWED: E.L.

12-JK5-5

SKILLING, HELLE, CHRISTIANSEN, ROBERTSON — Structural & Civil Engineers

PROJECT: THE WORLD TRADE CENTER | TITLE: BEAM CONNECTIONS TO SLURRY WALL-DETAIL C | DATE: 3-19-69

REVISIONS

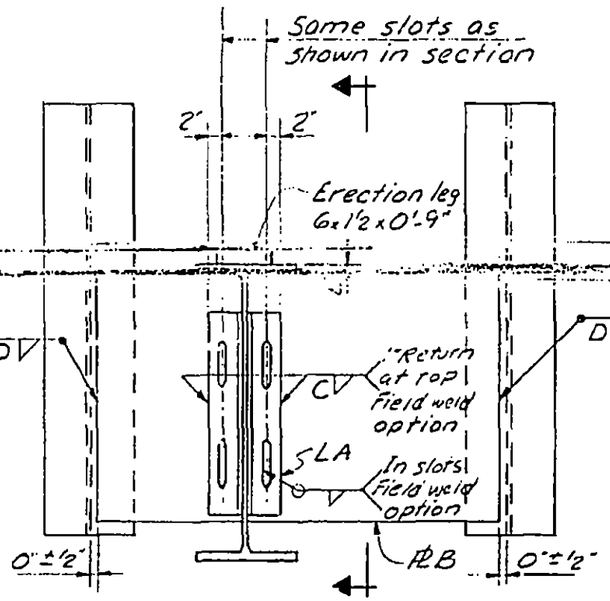

Elevation

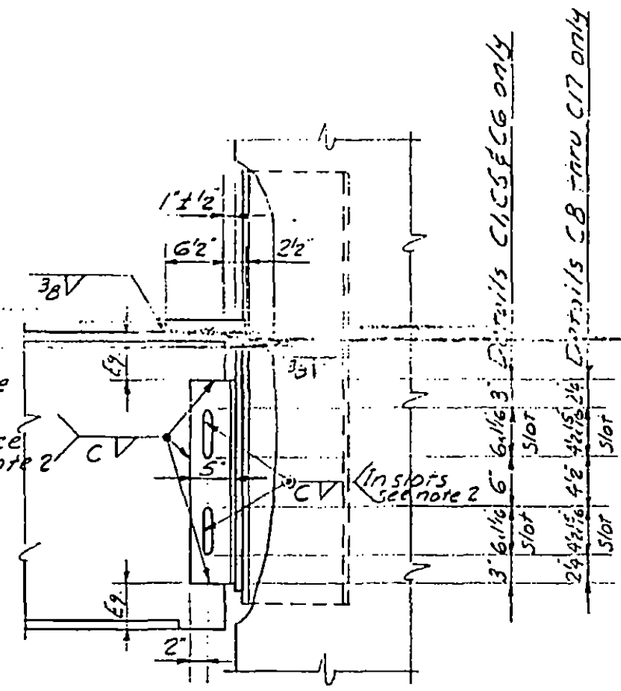

Section

Notes:

1. See notes on 12-JK5-1
2. If erection clearance is allowed between beam web & connection angles, size of weld has to be increased by the dimension of this gap. (Max clearance = 1/8")
3. Due to the deviation of exist beam supports, the weld size shown has to be increased by the dimension of the gap between PL and sup't. In no case should this gap be greater than 1/8".

LICENSED PROFESSIONAL ENGINEER — LESLIE E. ROBERTSON — No 34360 — UNIVERSITY OF THE STATE OF NEW YORK

DESIGNED: J.H.

DRAWN: A.L. FRAHOUI

REVIEWED: E.L.

12-JK5-6

SKILLING, HELLE, CHRISTIANSEN, ROBERTSON — Structural & Civil Engineers

PROJECT THE WORLD TRADE CENTER | TITLE BEAM CONNECTIONS TO SLURRY WALL-DETAIL D | DATE 3-19-69

REVISIONS

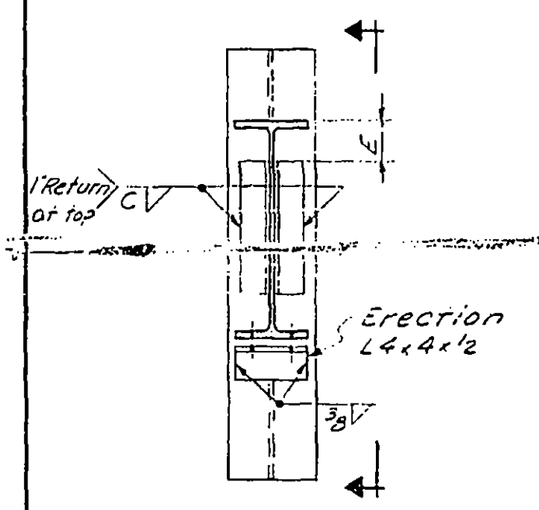

Elevation

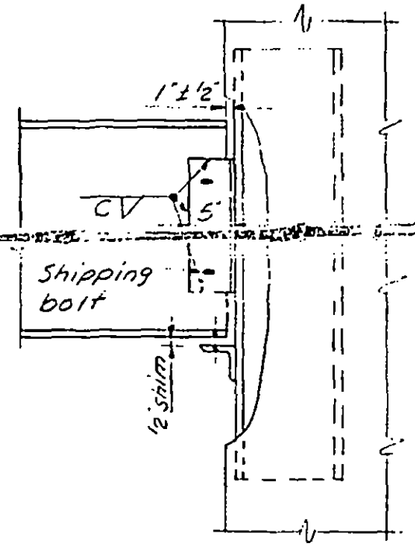

Section

Notes:
1. See notes on 12-JK5-1.

LICENSED PROFESSIONAL ENGINEER
LESLIE E. ROBERTSON
No. 34380
UNIVERSITY OF THE STATE OF NEW YORK

DESIGNED J.H.
DRAWN A.L. FRANQUI
REVIEWED E.L.

12-JK5-7

SKILLING, HELLE, CHRISTIANSEN, ROBERTSON — Structural & Civil Engineers

PROJECT THE WORLD TRADE CENTER | TITLE BEAM CONNECTIONS TO SLURRY WALL - DETAIL E | DATE 3-19-69

REVISIONS

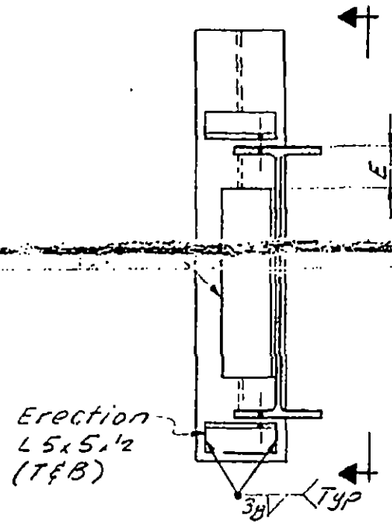

Elevation

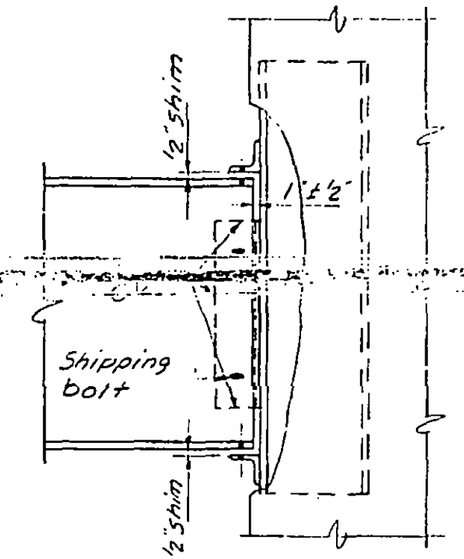

Section

Notes

1. See notes on 12-JK5-1.

LICENSED PROFESSIONAL ENGINEER
LESLIE E. ROBERTSON
No 34360
UNIVERSITY OF THE STATE OF NEW YORK

J.H.

DRAWN
A.L. FRANQUI

REVIEWED
E.L.

12-JK5-8

SKILLING, HELLE, CHRISTIANSEN, ROBERTSON — Structural & Civil Engineers

PROJECT: THE WORLD TRADE CENTER | TITLE: BEAM CONNECTIONS TO SLURRY WALL-DETAIL F | DATE: 3-31-69

REVISIONS

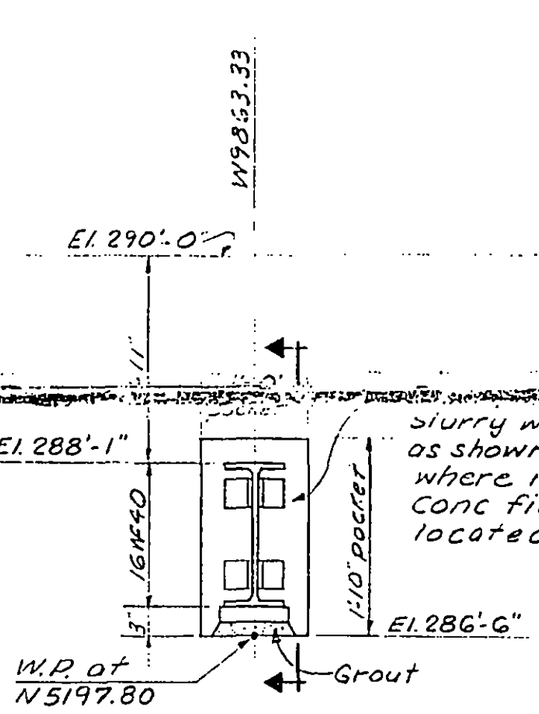

Elevation

DETAIL F1

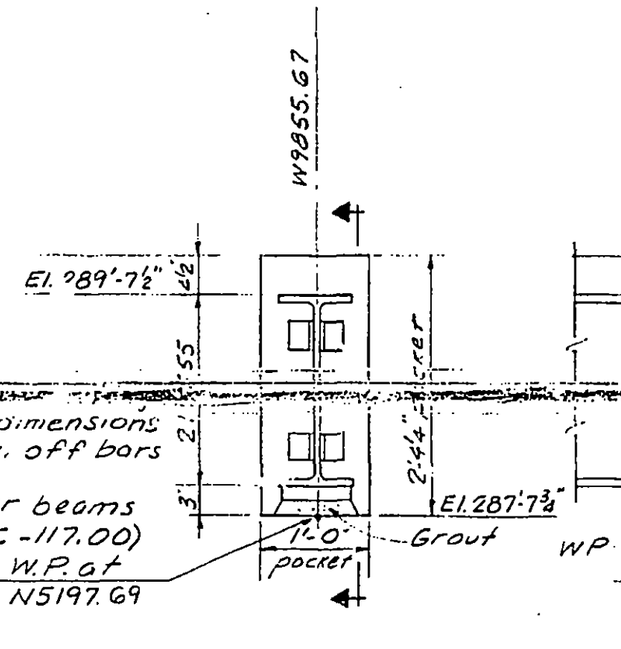

Elevation

DETAIL F2

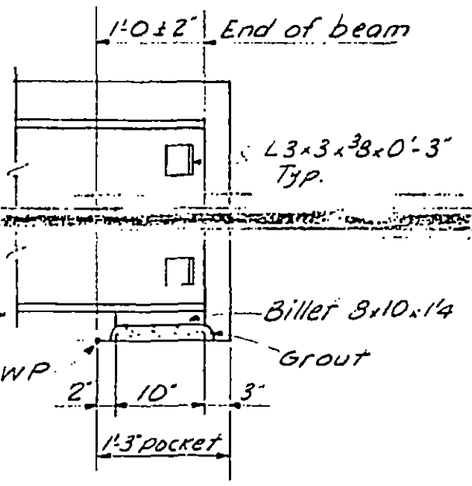

Section

LICENSED PROFESSIONAL ENGINEER
LESLIE E. ROBERTSON
No. 34360
UNIVERSITY OF THE STATE OF NEW YORK

3-3-69
2-14-69

DESIGNED

DRAWN A.L.F.

REVIEWED E.L

12-JKS-9

SKILLING, HELLE, CHRISTIANSEN, ROBERTSON — Structural & Civil Engineers

PROJECT: THE WORLD TRADE CENTER | TITLE: BEAM CONNECTIONS TO SLURRY WALL-DETAIL G | DATE: 3-19-69

REVISIONS

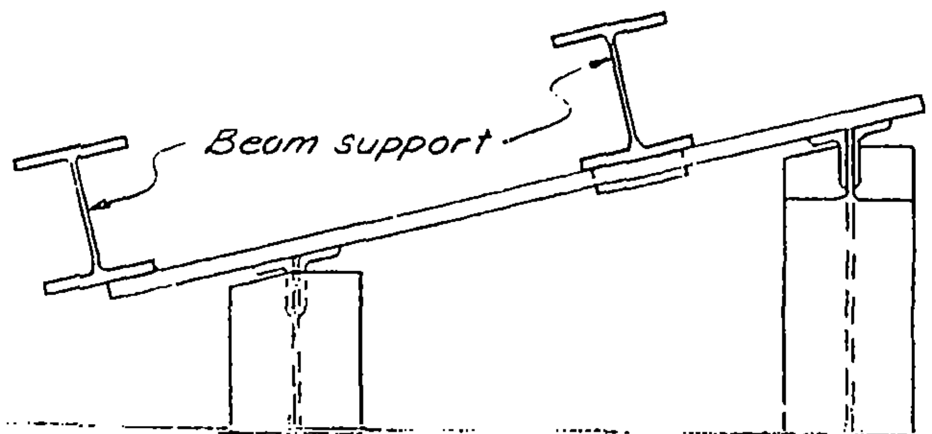

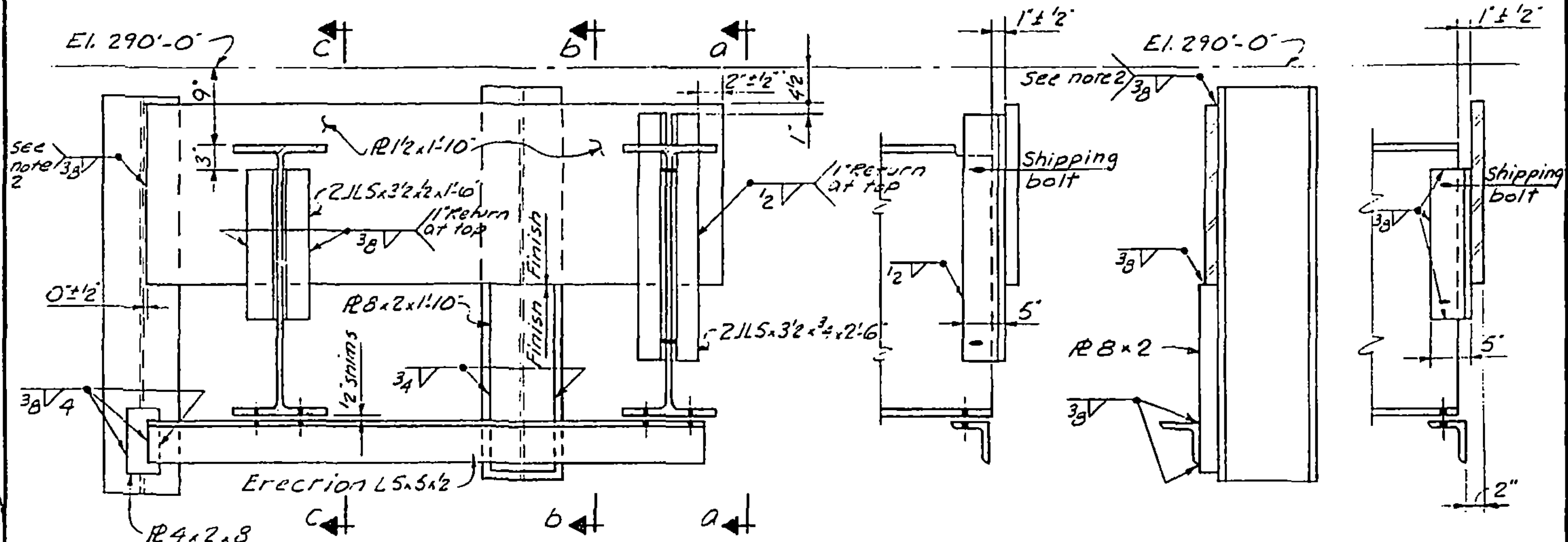

ELEVATION — Section a-a — Section b-b — Section c-c

Notes:
1. See notes on 12-JK5-1.
2. Due to the deviation of exist beam supports, the weld size shown has to be increased by the dimension of the gap [illegible] this gap be greater than 1/2".

LICENSED PROFESSIONAL ENGINEER — LESLIE E. ROBERTSON — No 34360 — UNIVERSITY OF THE STATE OF NEW YORK

DESIGNED: [illegible]
DRAWN: E.L. FRANQUI
REVIEWED: E.L.

12-JK5-10

SKILLING, HELLE, CHRISTIANSEN, ROBERTSON — Structural & Civil Engineers

PROJECT: THE WORLD TRADE CENTER | TITLE: BEAM CONNECTION TO SLURRY WALL - DETAIL H | DATE: 4-18-69

REVISIONS

5-29-69

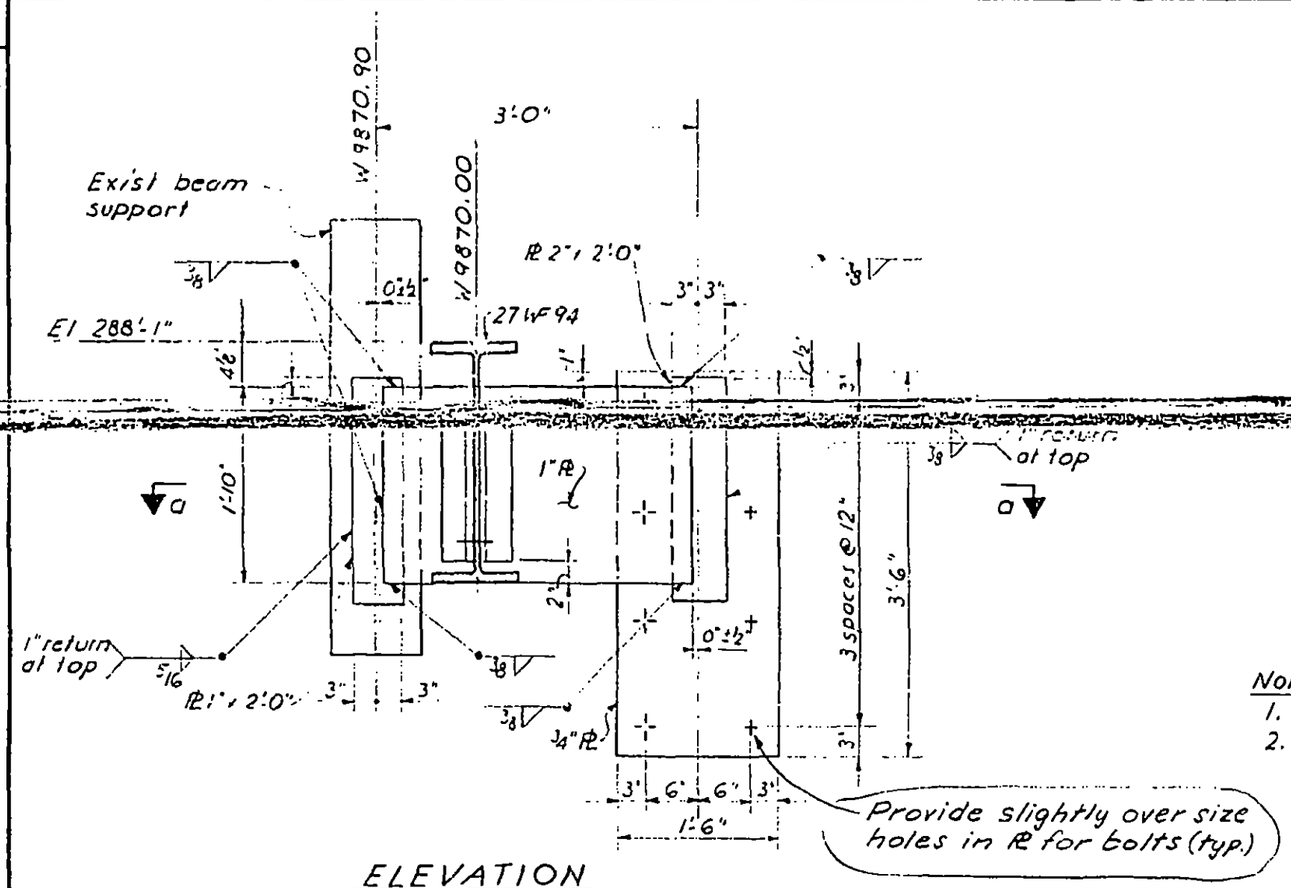

ELEVATION

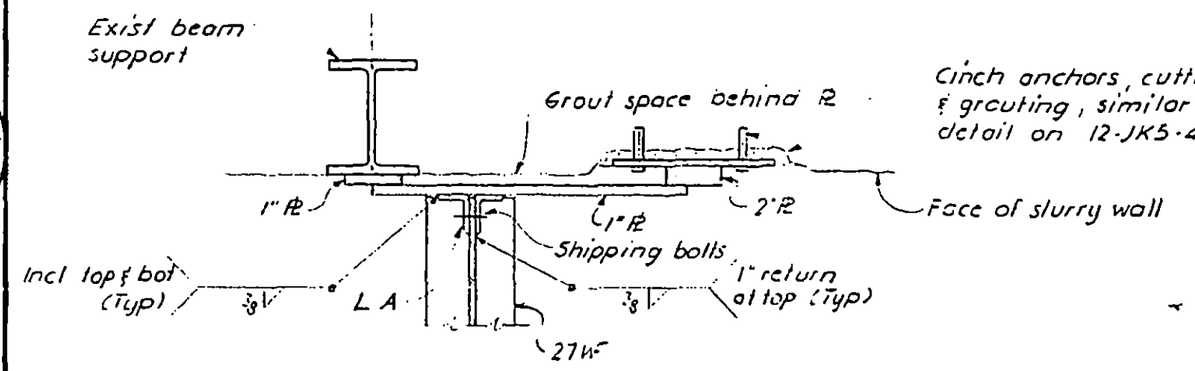

Section a-a

Notes:

1. See Notes on 12-JK5-1.
2. If erection clearance is allowed btw beam web & connection angles, size of weld has to be increased by the dimension of this gap (max clearance - ⅛")
3. Due to the deviation of exist beam support, the weld size shown has to be increased by the dimensions of the gap btwn PL and support. In no case should this gap be greater than ⅛".

LICENSED PROFESSIONAL ENGINEER — LESLIE E. ROBERTSON — No. 34380 — UNIVERSITY OF THE STATE OF NEW YORK

DESIGNED

F. Smith

REVIEWED

E.L.

12-JK5-11

SKILLING, HELLE, CHRISTIANSEN, ROBERTSON — Structural & Civil Engineers

PROJECT THE WORLD TRADE CENTER | TITLE BEARING PLATES UNDER 60"ϕ PIPE SUPPORTS | DATE 12-2-69

REVISIONS

12-10-69

1-6-70

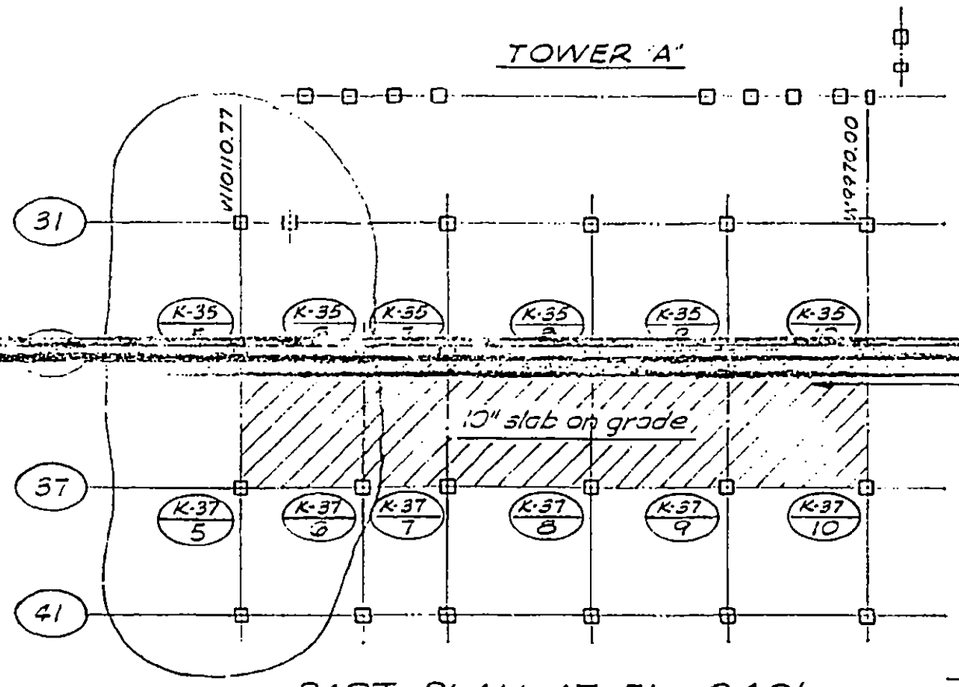

Provide (20 pieces) of 3'-0" × 1" × 5'-0" ℄s (A-36) under 60"ϕ pipe supports within shaded area. See Mech. shop Dwgs. (Sand-Courter 50-2-12) for exact locations. ℄s to be erected by Mechanical Contractor.

PART PLAN AT EL. 242'

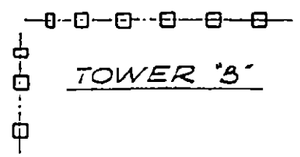

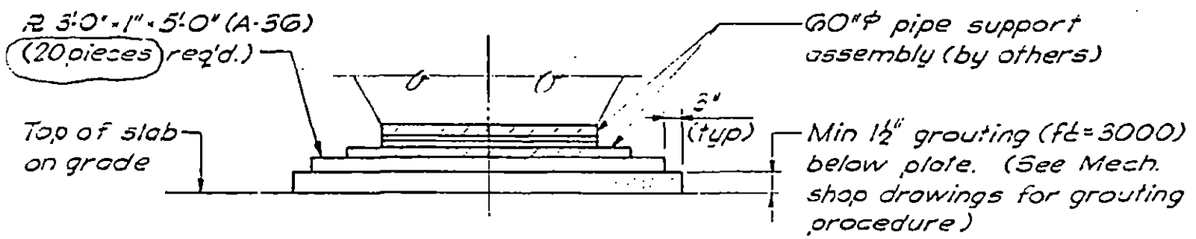

LICENSED PROFESSIONAL ENGINEER
LESLIE E. ROBERTSON
No. 34360
UNIVERSITY OF THE STATE OF NEW YORK

DESIGNED

DRAWN G.K.

REVIEWED E.L.

12-JKG-1

SKILLING, HELLE, CHRISTIANSEN, ROBERTSON — Structural & Civil Engineers

PROJECT THE WORLD TRADE CENTER | TITLE REPAIR AT FIRE DAMAGE AREA - EL. 310' | DATE 5-26-72

REVISIONS

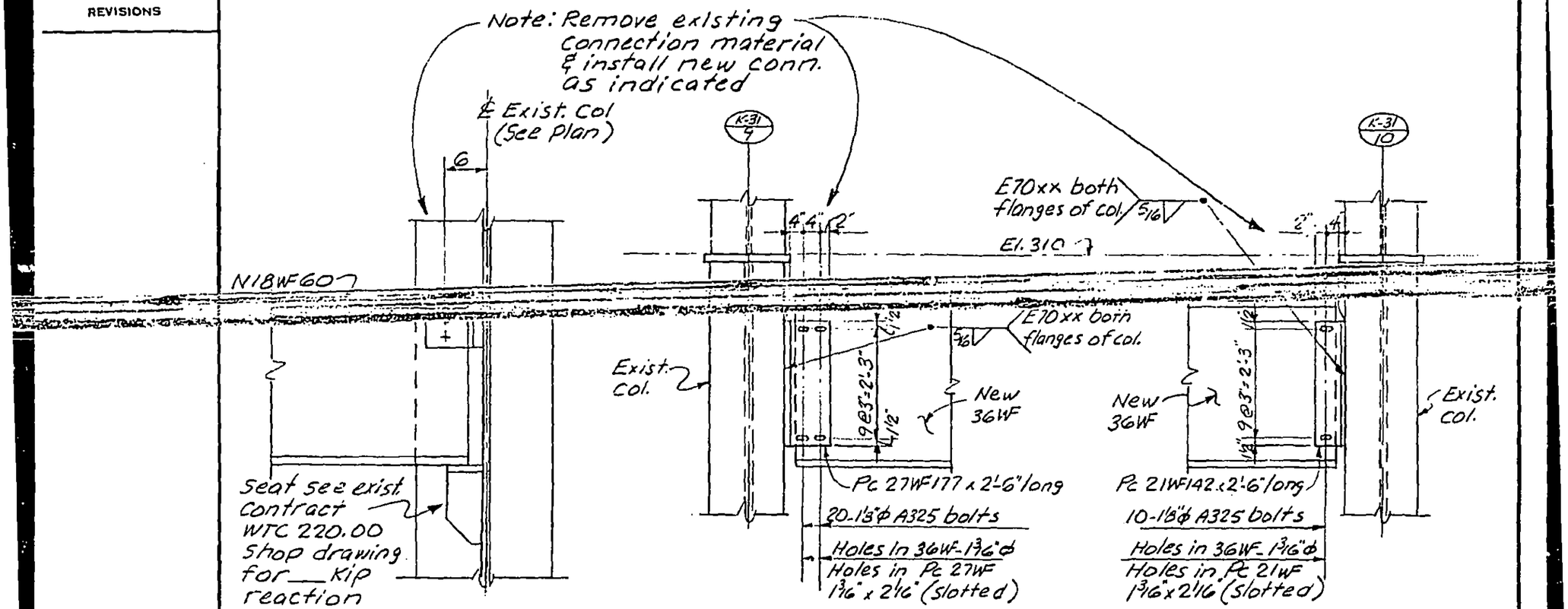

Detail B | Detail C | Detail D

Note:
Remove concrete as necessary from columns to make connections. Replace after connections have been completed.

LICENSED PROFESSIONAL ENGINEER — LESLIE E. ROBERTSON — No. 34980 — UNIVERSITY OF THE STATE OF NEW YORK

DESIGNED K. Chiang

DRAWN A.L. Franqui

REVIEWED

12-JK7-3

SKILLING, HELLE, CHRISTIANSEN, ROBERTSON Structural & Civil Engineers

PROJECT THE WORLD TRADE CENTER | TITLE REPAIR AT FIRE DAMAGE AREA - EL. 310' | DATE 5-26-72

REVISIONS

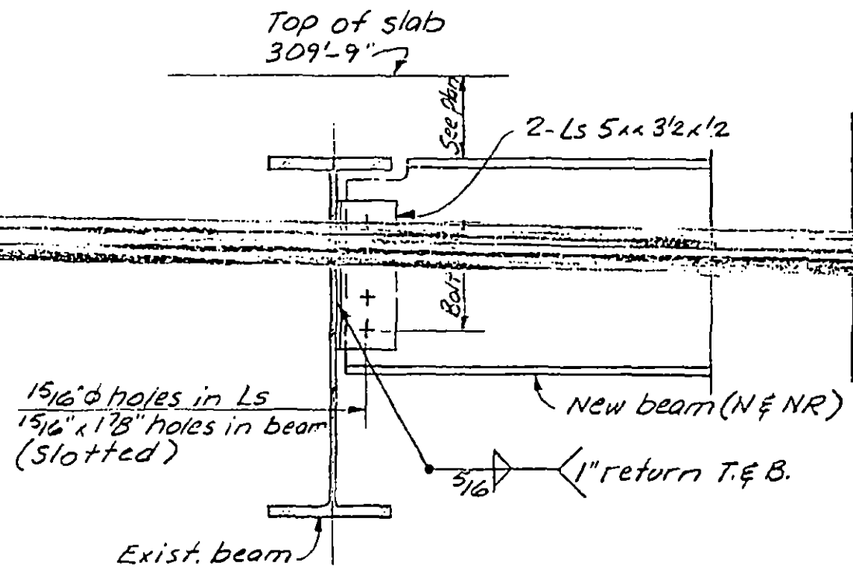

New Beam	Bolts A
16WF45	3-¾"ϕ A325
18WF	4-¾"ϕ A325
24WF & 24B	4-¾"ϕ A325

Detail E

LICENSED PROFESSIONAL ENGINEER
LESLIE E. ROBERTSON
No 34360
UNIVERSITY OF THE STATE OF NEW YORK

DESIGNED
DRAWN A.L. Franqui
REVIEWED

12-JK7-4

SKILLING, HELLE, CHRISTIANSEN, ROBERTSON — Structural & Civil Engineers

PROJECT: THE WORLD TRADE CENTER | TITLE: REPAIR DETAIL – EL. 310 | DATE: 6-5-72

REVISIONS

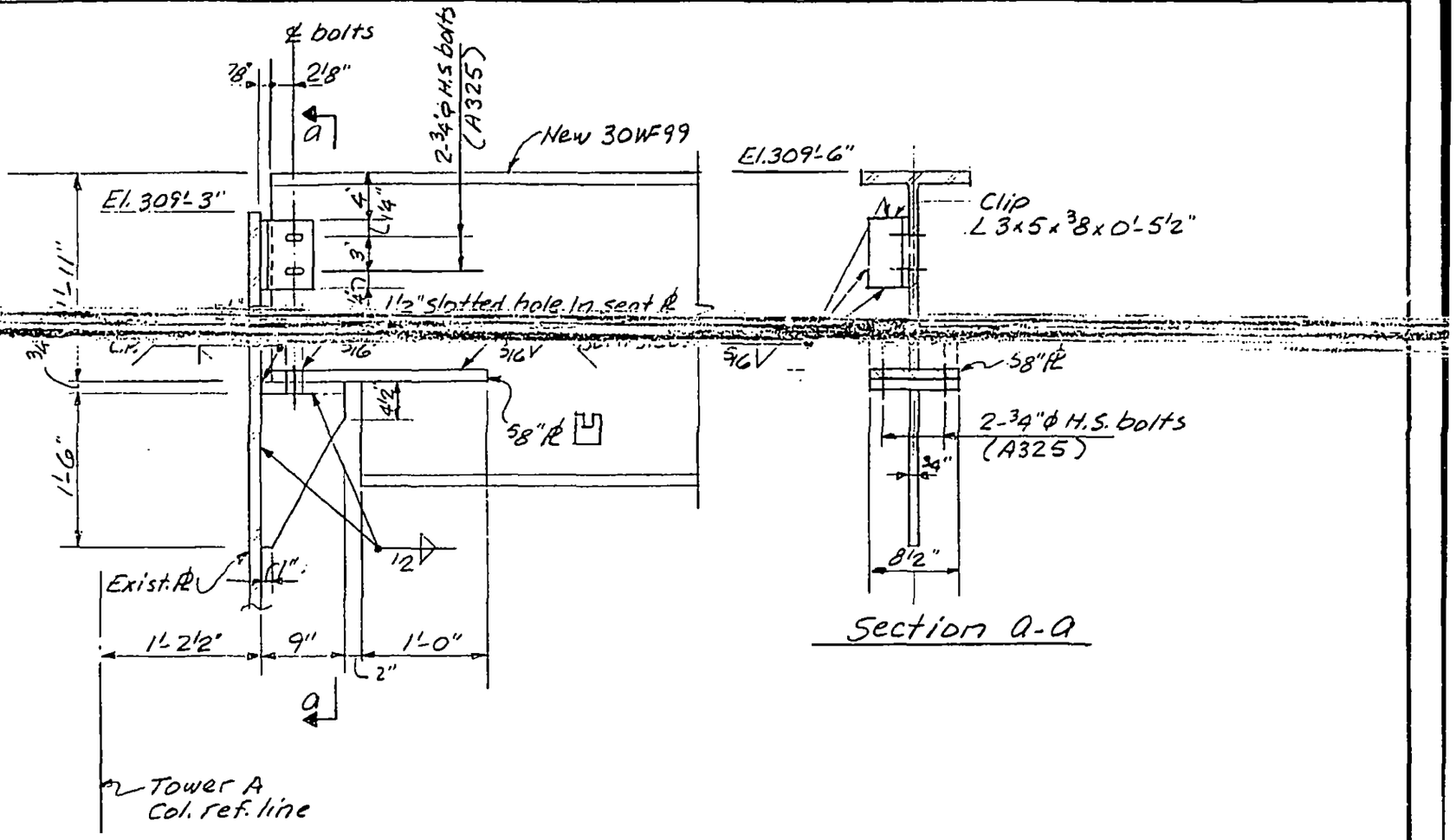

Section Q-Q

Note: All new material A36 steel.

LICENSED PROFESSIONAL ENGINEER — LESLIE E ROBERTSON — NO 34360 — UNIVERSITY OF THE STATE OF NEW YORK

J.M.

DRAWN F.L.F.

REVIEWED

12-JK7-5

SKILLING, HELLE, CHRISTIANSEN, ROBERTSON — Structural & Civil Engineers

PROJECT: THE WORLD TRADE CENTER | TITLE: K1-EL. 310 REPAIR DETAIL FOR EXISTING STEEL | DATE: 6-12-72

REVISIONS

6-16-72

1-24-73

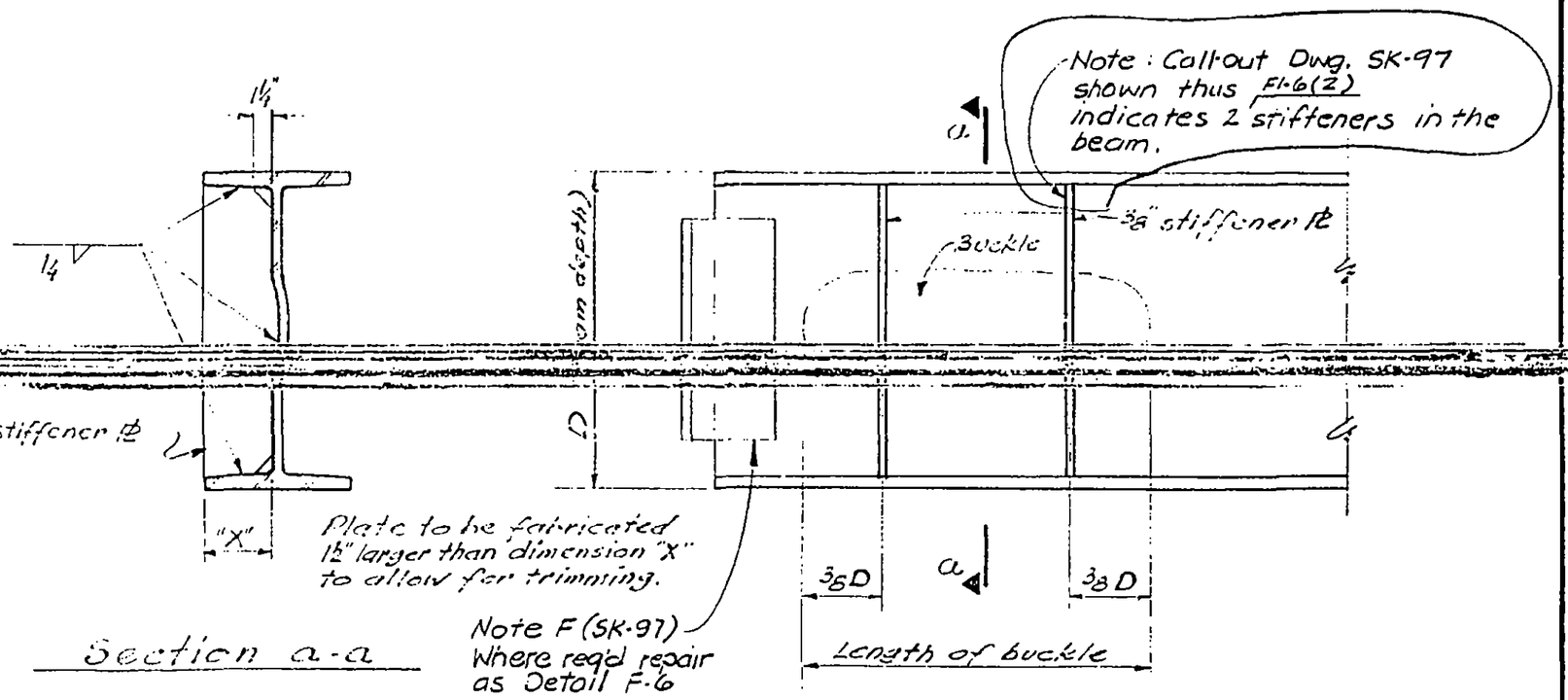

Procedure

1. Trim vertical stiffener plates to fit and install number and location as shown in table.

⅜" stiffener plates to be placed as follows:

LENGTH OF BUCKLE	NO. OF PLATES	PLACEMENT OF STIFFENERS
0.75 D	1	Center in bulge
0.75 D > 1.00 D	2	as shown above
1.00 D > 2.00 D	3	2 outside as shown above - center one centered between

Detail F

Buckled web

LICENSED PROFESSIONAL ENGINEER — LESLIE E. ROBERTSON — No. 34360 — UNIVERSITY OF THE STATE OF NEW YORK

DESIGNED

DRAWN

REVIEWED

12-JK7-6

SKILLING, HELLE, CHRISTIANSEN, ROBERTSON — Structural & Civil Engineers

PROJECT: THE WORLD TRADE CENTER | TITLE: R1-EL.310 REPAIR DETAIL FOR EXISTING STEEL | DATE: 6-12-72

REVISIONS

6-16-72

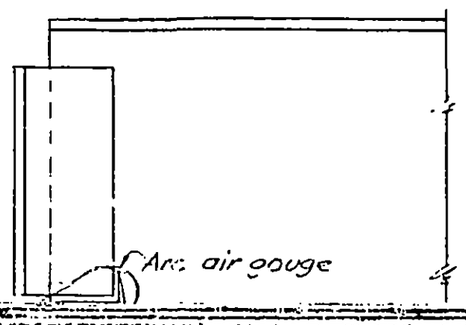

Note F (SK-97)

Shore beam

Procedure

1. Shore beam
2. Remove angle connection
3. Drill hole to terminate crack.
4. Straighten and arc-air gouge area of sheared web.
5. Replace with sound weld metal or remove distorted material and replace with C.P. welded A36 patch plate of same thickness as web
6. Replace connection to provide R1P reaction indicated in Plan.
7. Remove shores.

Detail F2

Sheared web

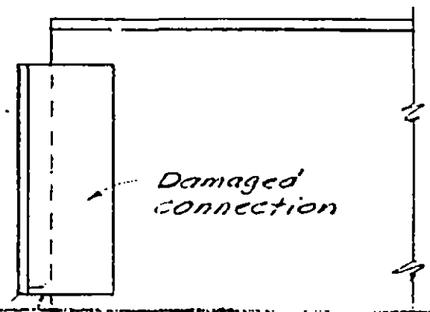

Note F (SK-97) Where req'd. repair as Detail F2.

Shore beam

Procedure

1. Shore beam.
2. Remove damaged connection. (bolts, angles and weld.)
3. Replace with same type connection, but capacity to be as shown in Plan.
4. Remove shores.

Detail F3

Failed connection

Detail F10

1. Connection to be examined by the "Engineer" and where signs of damage are found connection to be replaced in accordance with Detail F3
2. See also Note F (SK-97)

LICENSED PROFESSIONAL ENGINEER LESLIE E. ROBERTSON No 34360 UNIVERSITY OF THE STATE OF NEW YORK

DESIGNED

SKILLING, HELLE, CHRISTIANSEN, ROBERTSON — Structural & Civil Engineers

PROJECT: THE WORLD TRADE CENTER | TITLE: K1-EL. 310 REPAIR DETAIL FOR EXISTING STEEL | DATE: 6-12-72

REVISIONS

Printed 6-16-72

1-24-73

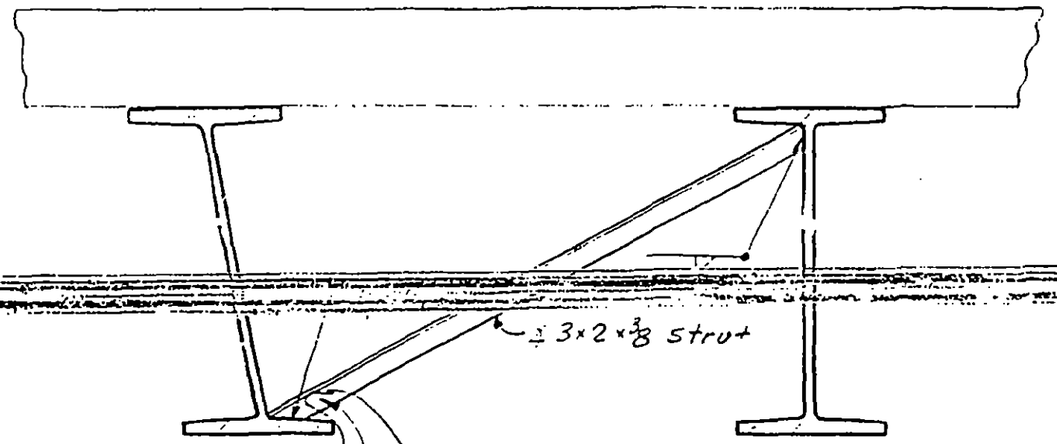

1. A 5' long "straight-edge" will be used to determine portions of beam where sweep (dimension "s") exceeds 3/16 in 5'-0" of length.
2. One or more struts are to be added to beams indicated as "F4" in Plan. Actual number and location to be determined by the "Engineer" in field.

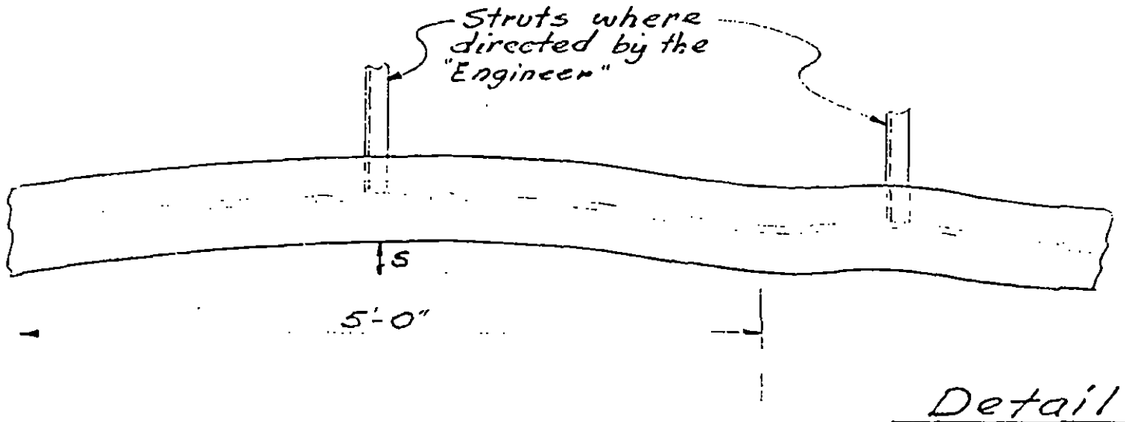

Detail F4
Sweep

LICENSED PROFESSIONAL ENGINEER — LESLIE E. ROBERTSON — No 34360 — UNIVERSITY OF THE STATE OF NEW YORK

DESIGNED

DRAWN

REVIEWED

12-JK7-8

SKILLING, HELLE, CHRISTIANSEN, ROBERTSON — Structural & Civil Engineers

PROJECT: THE WORLD TRADE CENTER | TITLE: K1 EL. 310 REPAIR DETAIL FOR EXISTING STEEL | DATE: 6-12-72

REVISIONS

6-16-72

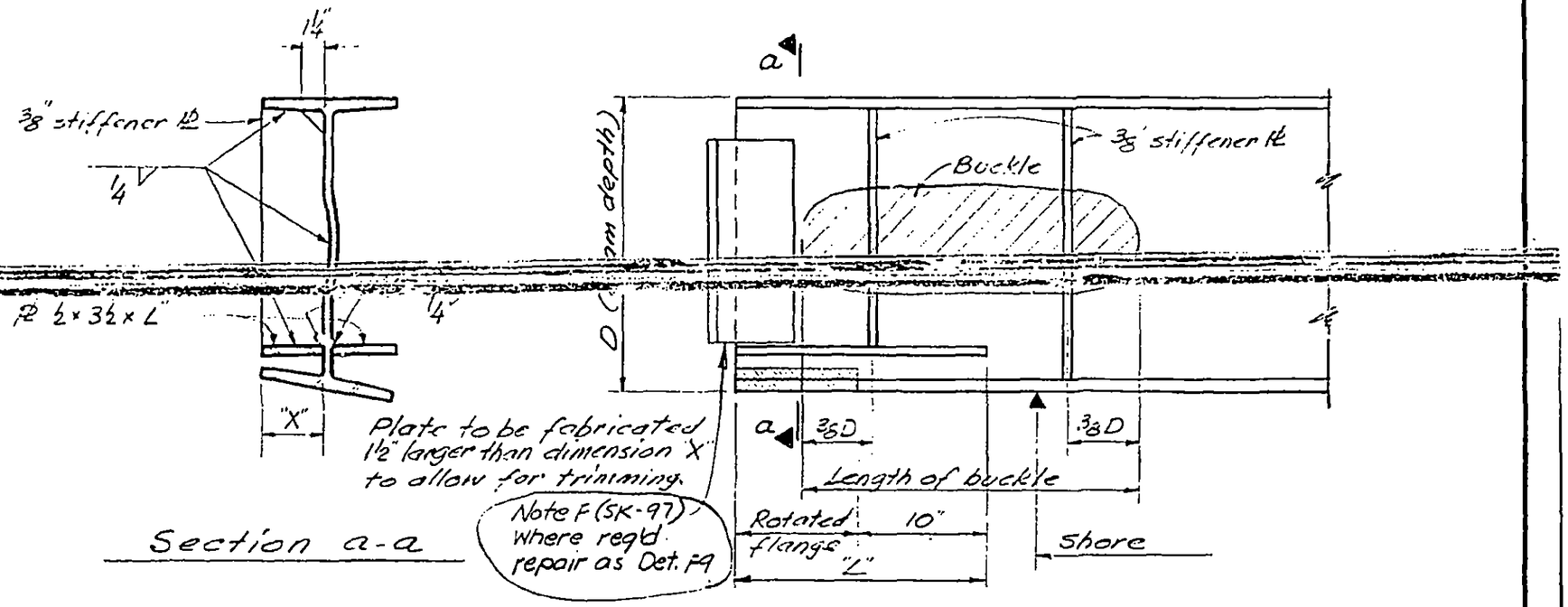

Plate to be fabricated 1½" larger than dimension "X" to allow for trimming.

Note F (SK-97) Where reqd. repair as Det. F4

Section a-a

Procedure

1. Shore beam.
2. Remove damaged connections.
3. Replace with same type connection, but capacity to be as shown in Plan.
4. Install horizontal plates.
5. Trim vertical stiffener plates to fit and install number and location as shown in table.
6. Remove shores.

⅜" stiffener plates to be placed as follows:

LENGTH OF BUCKLE	NO. OF PLATES	PLACEMENT OF STIFFENERS
0.75 D	1	Center in bulge
0.75 D > 1.00 D	2	as shown above
1.00 D > 2.00 D	3	2 outside as shown above - center one centered between

Detail F5

Buckled acc. failed connection & rotated flange

LICENSED PROFESSIONAL ENGINEER — LESLIE E. ROBERTSON — No. 34380 — UNIVERSITY OF THE STATE OF NEW YORK

DESIGNED

DRAWN

REVIEWED

12-JK7-9

SKILLING, HELLE, CHRISTIANSEN, ROBERTSON — Structural & Civil Engineers

PROJECT: THE WORLD TRADE CENTER | TITLE: K1-EL.310 REPAIR DETAIL FOR EXISTING STEEL | DATE: 6-12-72

REVISIONS

6-16-72

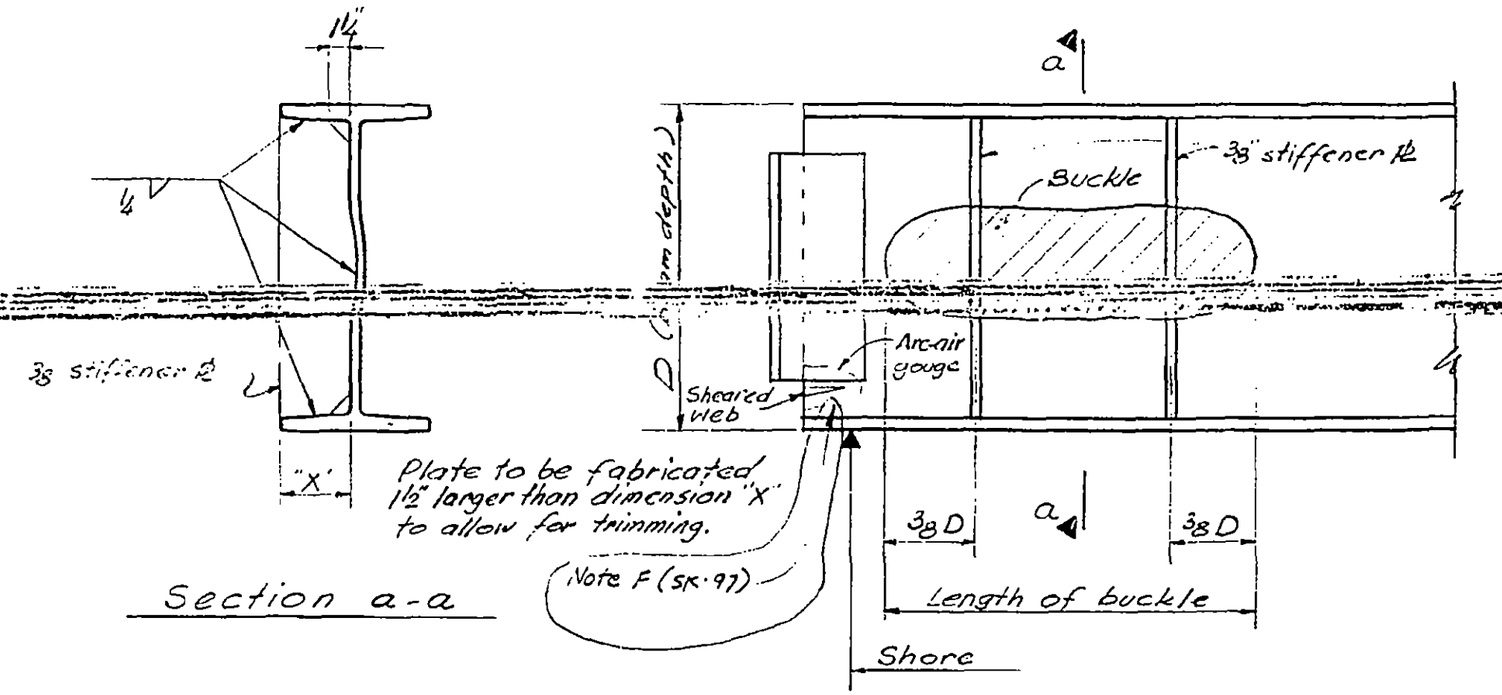

Section a-a

⅜" stiffener plates to be placed as follows:

LENGTH OF BUCKLE	NO. OF PLATES	PLACEMENT OF STIFFENERS
0.75 D	1	Center in bulge
0.75 D > 1.00 D	2	as shown above
1.00 D > 2.00 D	3	2 outside as shown above center one centered between

Procedure

1. Shore beam.
2. Remove connection.
3. Drill hole to terminate crack.
4. Straighten and arc-air gouge area of sheared web.
5. Replace with sound weld metal or remove distorted material and replace with full penetration welded A36 patch plate of same thickness of web.
6. Replace with same type connection, but capacity to be as shown in Plan.
7. Trim vertical stiffener plates to fit and install number and location as shown in table
8. Remove shores.

Detail F6

Buckled web & sheared web

LICENSED PROFESSIONAL ENGINEER — LESLIE E. ROBERTSON — No 34360 — UNIVERSITY OF THE STATE OF NEW YORK

DESIGNED

DRAWN

REVIEWED

12-JK7-10

SKILLING, HELLE, CHRISTIANSEN, ROBERTSON — Structural & Civil Engineers

PROJECT: THE WORLD TRADE CENTER | TITLE: K1-EL.310 REPAIR DETAIL FOR EXISTING STEEL | DATE: 6-12-72

REVISIONS

6-16-72

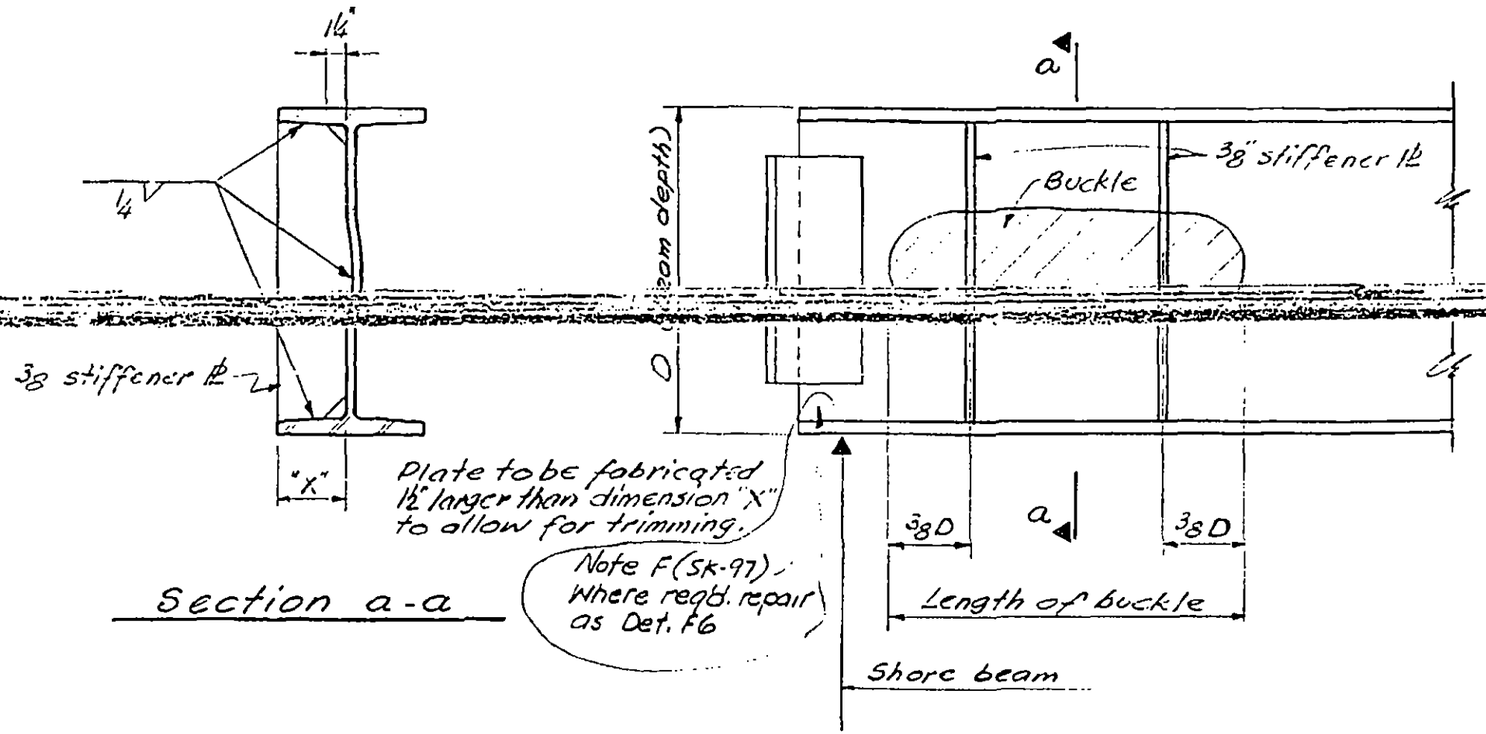

Section a-a

3/8 stiffener plates to be placed as follows:

LENGTH OF BUCKLE	No. of PLATES	PLACEMENT OF STIFFENERS
0.75 D	1	Center in bulge
0.75 D > 1.00 D	2	as shown above
1.00 D > 2.00 D	3	2 outside as shown above + center one centered between

Procedure

1. Shore beam
2. Remove damaged connection. (Bolts, angles & welds)
3. Replace with same type connection, but capacity to be as shown in Plan
4. Trim vertical stiffener plates to fit and install number and location as shown in table
5. Remove shores

Detail F7

Buckled web & failed connection

LICENSED PROFESSIONAL ENGINEER — LESLIE E. ROBERTSON — No 34360 — UNIVERSITY OF THE STATE OF NEW YORK

DESIGNED

DRAWN

REVIEWED

12-JK7-11

SKILLING, HELLE, CHRISTIANSEN, ROBERTSON — Structural & Civil Engineers

PROJECT: THE WORLD TRADE CENTER | TITLE: K1 EL. 310 REPAIR DETAIL FOR EXISTING STEEL | DATE: 6-12-72

REVISIONS

5-16-72

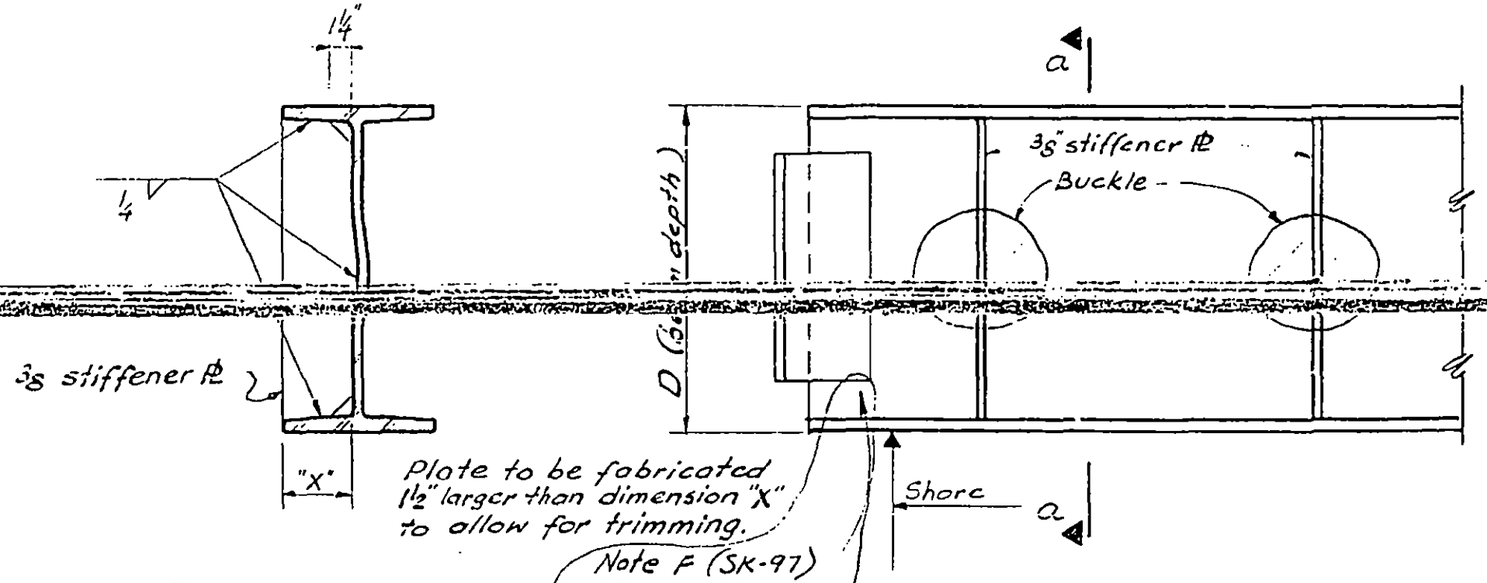

Section a-a

Procedure

1. Shore beam
2. Remove damaged connection
3. Replace with same type connection, but capacity to be as shown in Plan
4. Trim vertical stiffener plates to fit and install as shown.
5. Remove shores.

LICENSED PROFESSIONAL ENGINEER — LESLIE E. ROBERTSON — No. 34360 — UNIVERSITY OF THE STATE OF NEW YORK

DESIGNED

DRAWN

REVIEWED

Detail F3

Buckled web 2 locations & failed connection

12-JK-12

SKILLING, HELLE, CHRISTIANSEN, ROBERTSON — Structural & Civil Engineers

PROJECT THE WORLD TRADE CENTER | TITLE K1 - EL.310 REPAIR DETAIL FOR EXISTING STEEL | DATE 6-12-72

REVISIONS

6-16-72

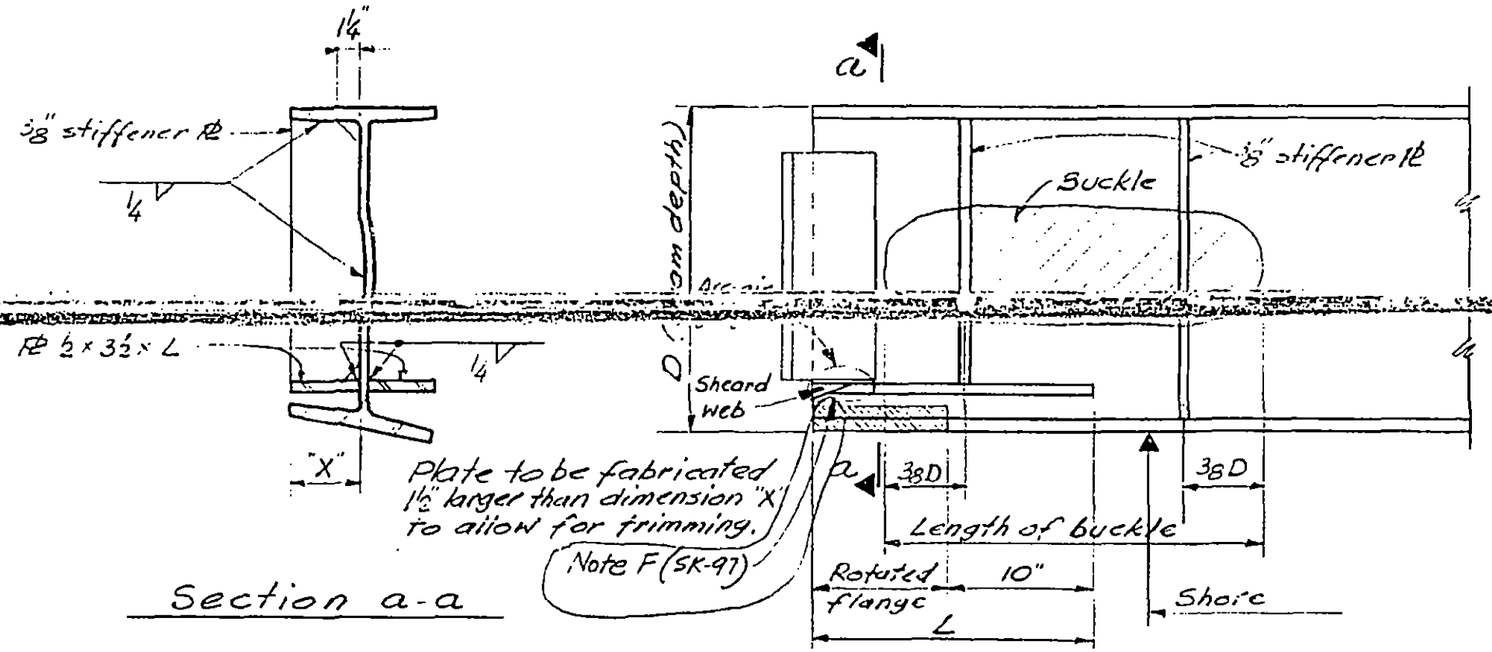

Section a-a

3/8" stiffener plates to be placed as follows:

LENGTH OF BUCKLE	No. OF PLATES	PLACEMENT OF STIFFENERS
0.75 D	1	Center in bulge
0.75 D > 1.00 D	2	as shown above
1.00 D > 2.00 D	3	2 outside as shown above Center one centered between

Procedure

1. Shore beam.
2. Remove angle connections.
3. Drill hole to terminate crack.
4. Straighten and arc-air gouge area of sheared web.
5. Replace with sound weld metal or remove distorted material and replace with full penetration welded A-36 patch plate of same thickness of web.
6. Replace with same type connection, but capacity to be as shown in Plan.
7. Trim vertical stiffener plates to fit and install number and location as shown in table
8. Remove shores.

Detail for

Buckled web, sheared web & rotated flange

12-JK7-13

LICENSED PROFESSIONAL ENGINEER LESLIE E. ROBERTSON No 34360 UNIVERSITY OF THE STATE OF NEW YORK

DESIGNED

DRAWN

REVIEWED

SKILLING, HELLE, CHRISTIANSEN, ROBERTSON — Structural & Civil Engineers

PROJECT: THE WORLD TRADE CENTER | TITLE: K1-EL.310 REPAIR DETAIL FOR EXISTING STEEL | DATE: 1-24-72

REVISIONS

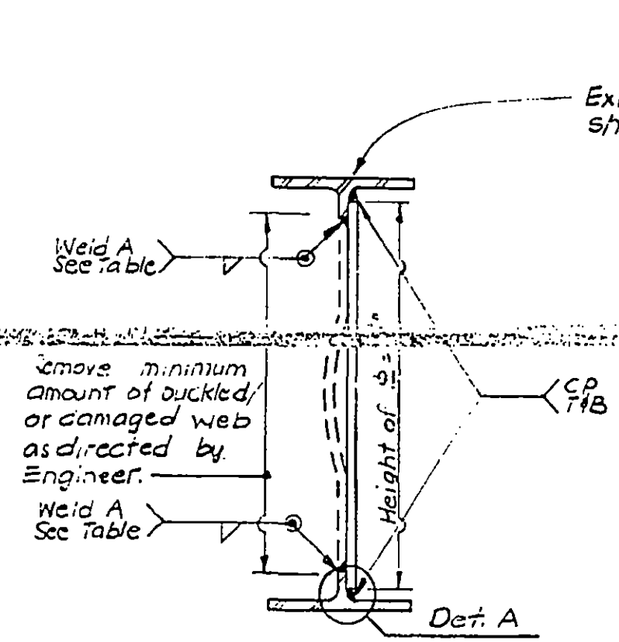

Section A-A

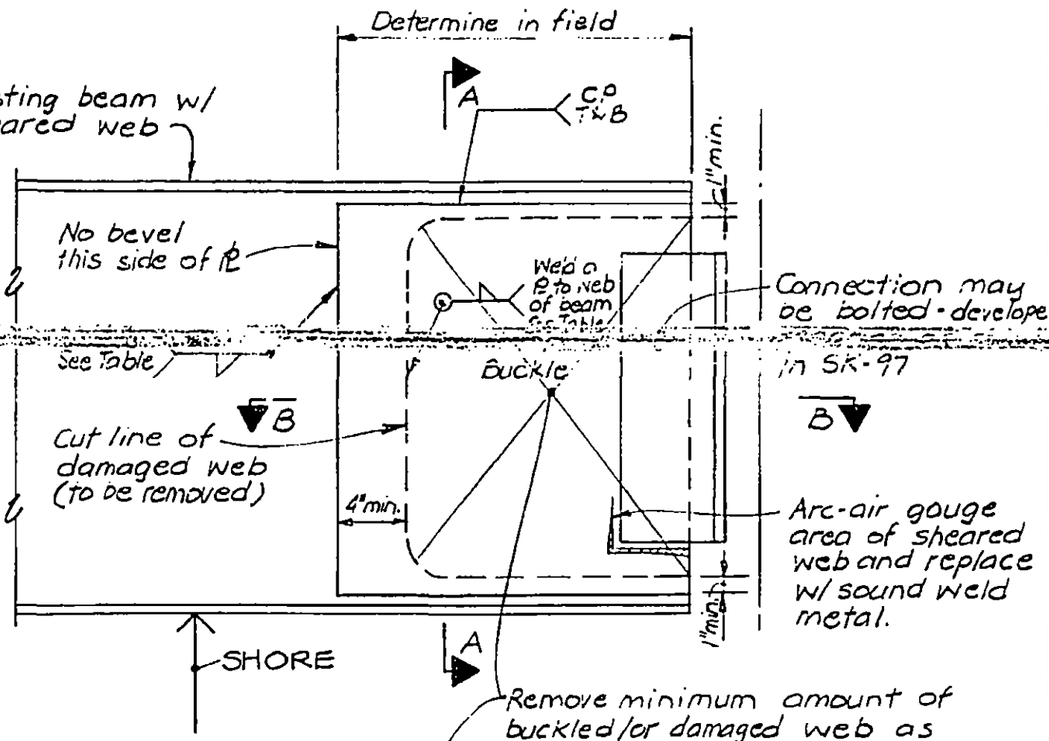

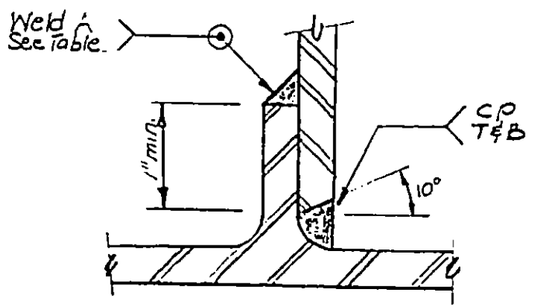

Detail A

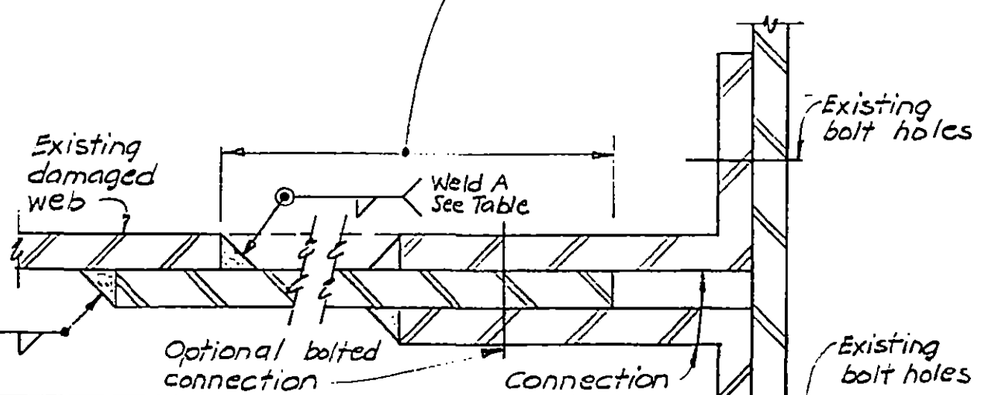

Section B-B

SIZE OF EXISTING BEAM	WEB THICKNESS	HEIGHT ("T")	THICKNESS NEW PLATE	WELD "A"	WELD "B"
16WF26	1/4"	13 3/4"	5/16"	1/4"	3/16"
24WF76	7/16"	21"	1/2"	1/2"	3/8"

AR (ALT. #2)

12-JK7-14

LICENSED PROFESSIONAL ENGINEER — LESLIE E. ROBERTSON — No 34360 — UNIVERSITY OF THE STATE OF NEW YORK

DESIGNED

DRAWN

REVIEWED

SKILLING, HELLE, CHRISTIANSEN, ROBERTSON — Structural & Civil Engineers

PROJECT: THE WORLD TRADE CENTER | TITLE: REPAIR AT EL. 310' | DATE: 5-26-72

REVISIONS

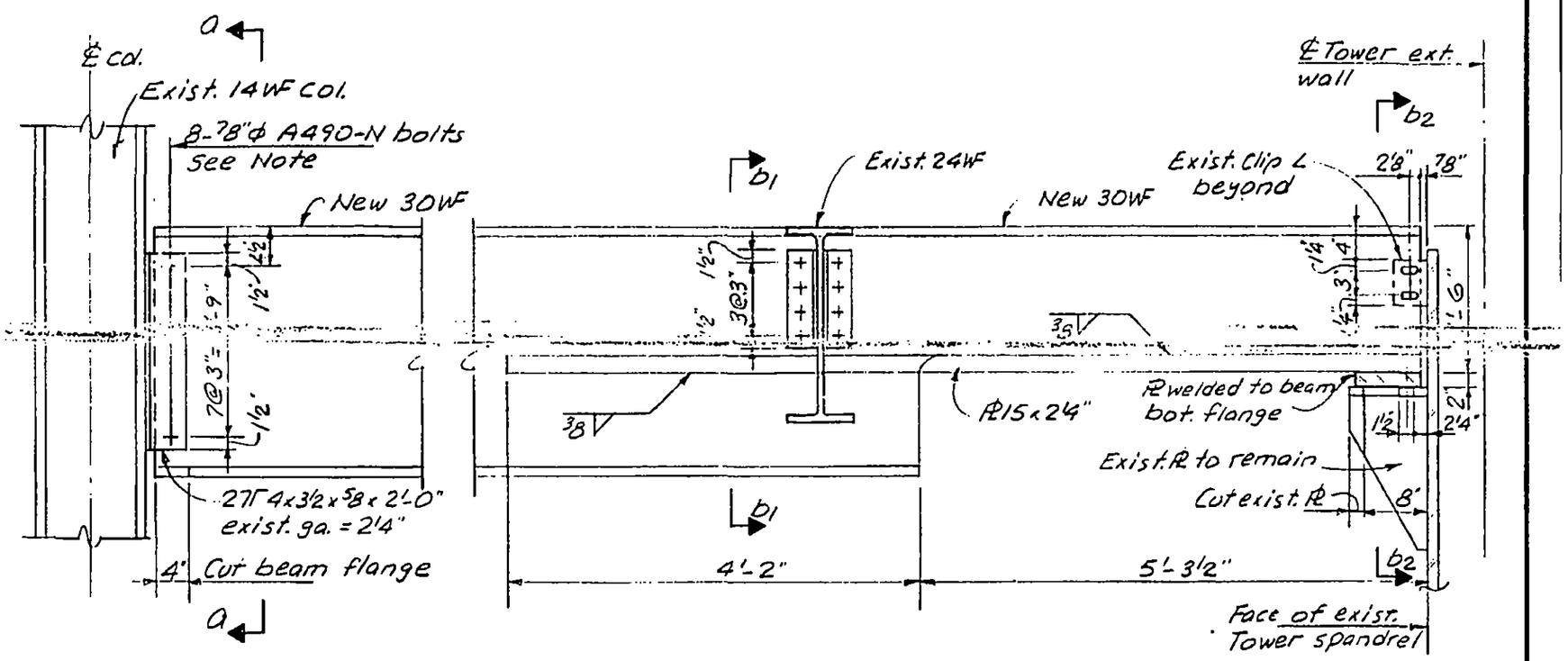

Detail A

Note: Remove ⅞"ϕ exist. bolts & install new ⅞"ϕ A490-N bolts with new beam.

Detail B

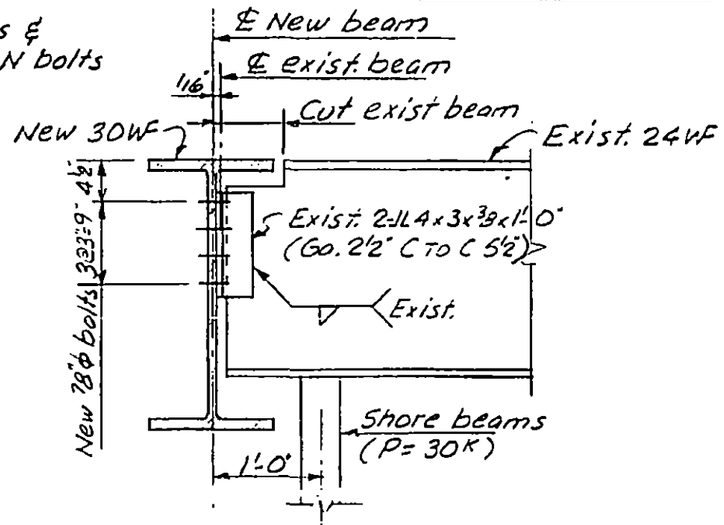

Detail C

LICENSED PROFESSIONAL ENGINEER
LESLIE E. ROBERTSON
No 34360
UNIVERSITY OF THE STATE OF NEW YORK

DESIGNED

DRAWN A.L. Frangvi

REVIEWED

12-JK7-20.1

SKILLING, HELLE, CHRISTIANSEN, ROBERTSON — Structural & Civil Engineers

PROJECT THE WORLD TRADE CENTER | TITLE REPAIR AT EL. 310' | DATE 5-26-72

REVISIONS

10-1-73

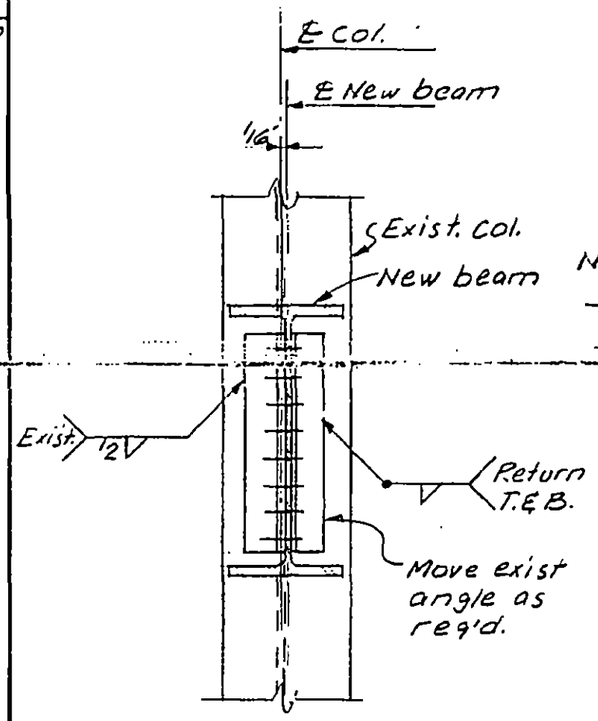

Section a-a

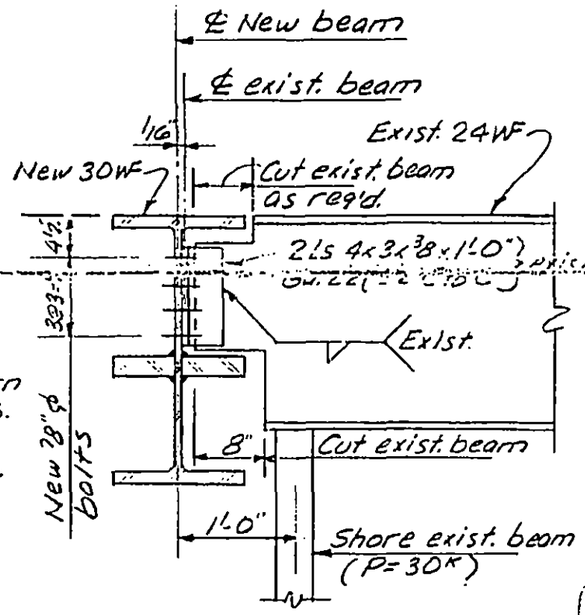

Section b1-b1

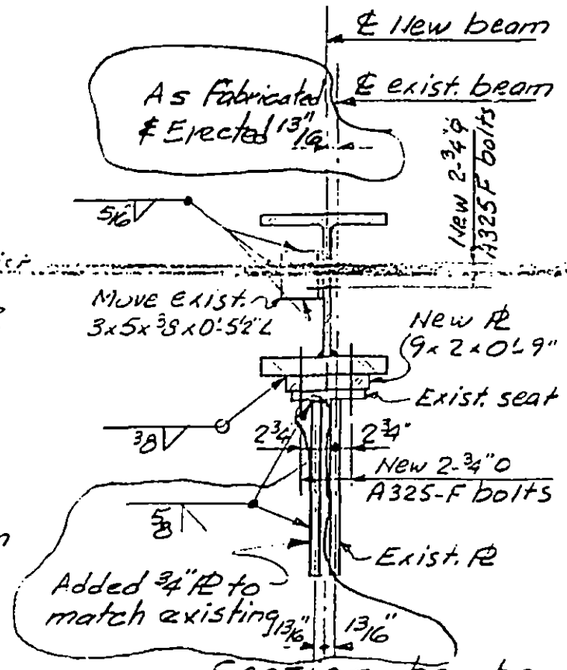

Section b2-b2

LICENSED PROFESSIONAL ENGINEER — LESLIE E. ROBERTSON — No 34360 — UNIVERSITY OF THE STATE OF NEW YORK

DESIGNED

DRAWN A.L. Franqui

REVIEWED

12-JK7-20.2

SKILLING, HELLE, CHRISTIANSEN, ROBERTSON — Structural & Civil Engineers

PROJECT THE WORLD TRADE CENTER | TITLE REPAIR AT EL. 310' | DATE 5-26-72

REVISIONS

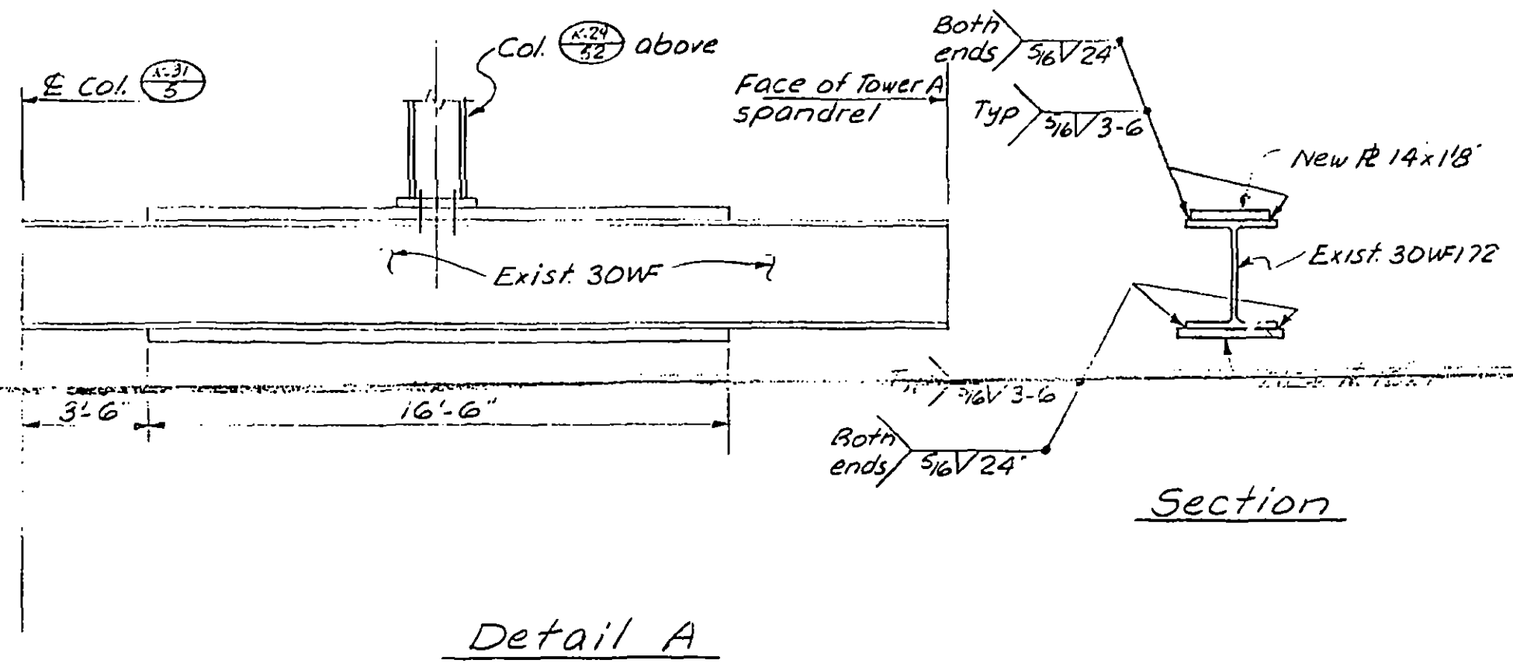

Detail A

Section

LICENSED PROFESSIONAL ENGINEER
LESLIE E. ROBERTSON
No 34360
UNIVERSITY OF THE STATE OF NEW YORK

DESIGNED
DRAWN A.L. Franqui
REVIEWED

12-JK7-21

SKILLING, HELLE, CHRISTIANSEN, ROBERTSON — Structural & Civil Engineers

PROJECT: THE WORLD TRADE CENTER | TITLE: CONNECTION DETAILS | DATE: 6-13-69

REVISIONS

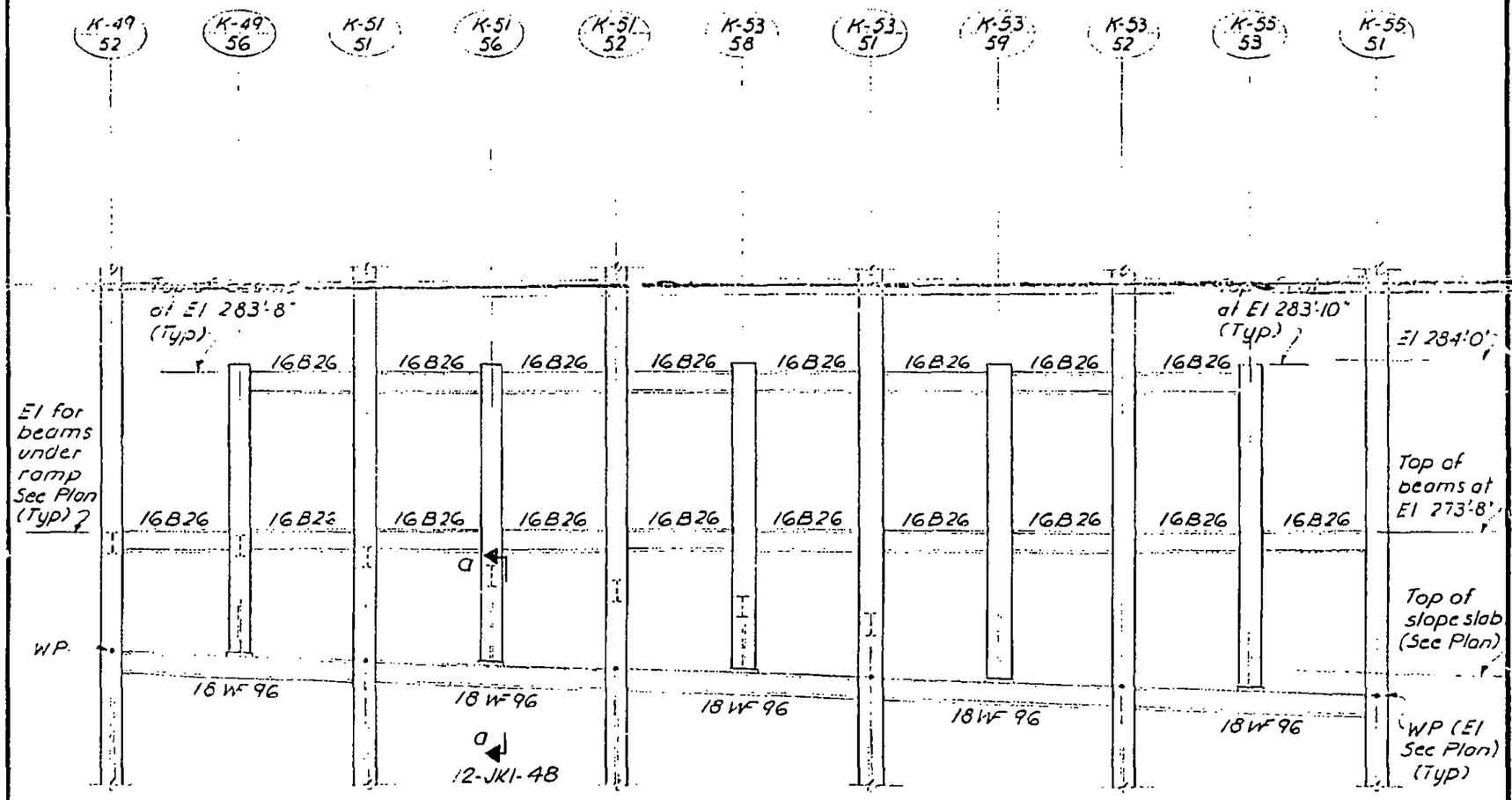

Elevation
(Looking East)

LICENSED PROFESSIONAL ENGINEER — LESLIE E. ROBERTSON — No. 34360 — UNIVERSITY OF THE STATE OF NEW YORK

DESIGNED

DRAWN: F. Smith

REVIEWED: E.L.

12-JK1-47

SKILLING, HELLE, CHRISTIANSEN, ROBERTSON — Structural & Civil Engineers

PROJECT: THE WORLD TRADE CENTER | TITLE: CONNECTION DETAILS | DATE: 6-13-69

REVISIONS

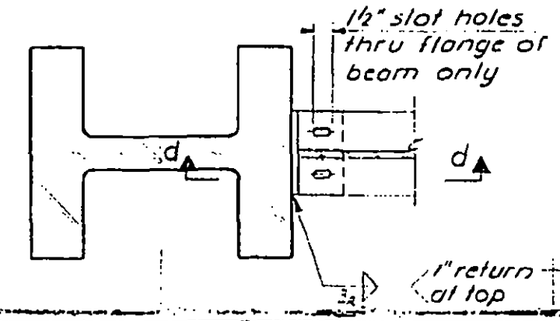

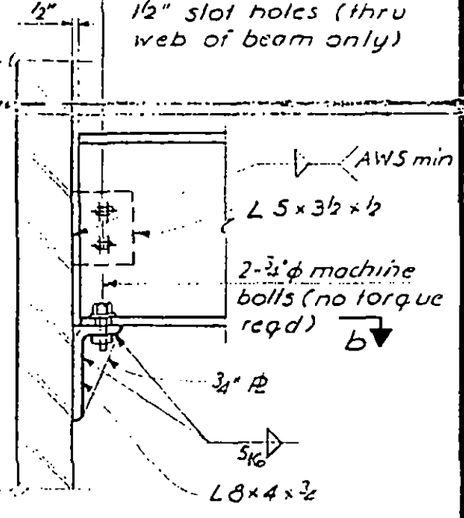

Section d-d

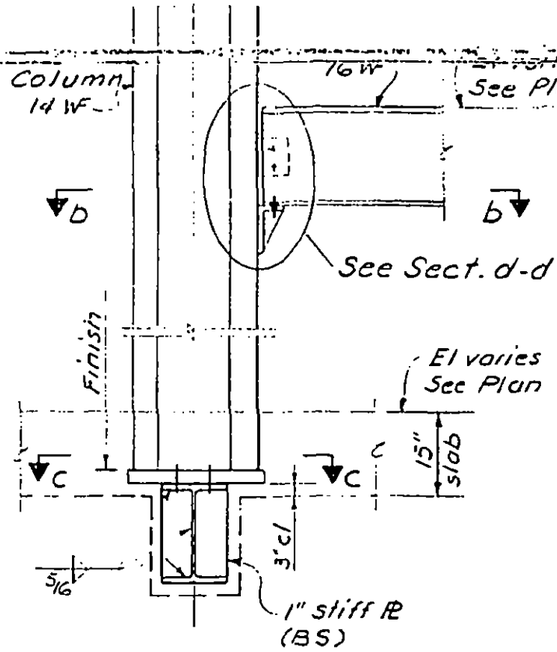

Section a-a
(see 12-JK1-47)

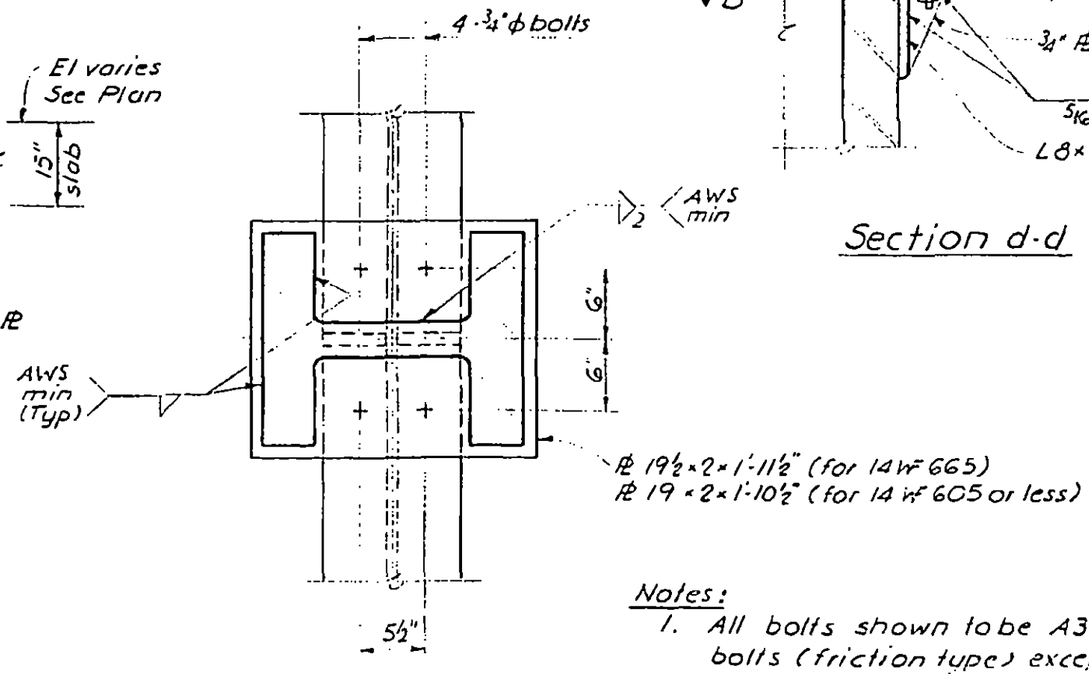

Section c-c

Notes:

1. All bolts shown to be A325 HS bolts (friction type) except as noted.

LICENSED PROFESSIONAL ENGINEER — LESLIE E. ROBERTSON — No. 34360 — UNIVERSITY OF THE STATE OF NEW YORK

DESIGNED

DRAWN: F. Smith

REVIEWED: E.L.

12-JK1-48

SKILLING, HELLE, CHRISTIANSEN, ROBERTSON — Structural & Civil Engineers

PROJECT THE WORLD TRADE CENTER | TITLE BEAM CONNECTION DETAILS | DATE 12-3-68

REVISIONS

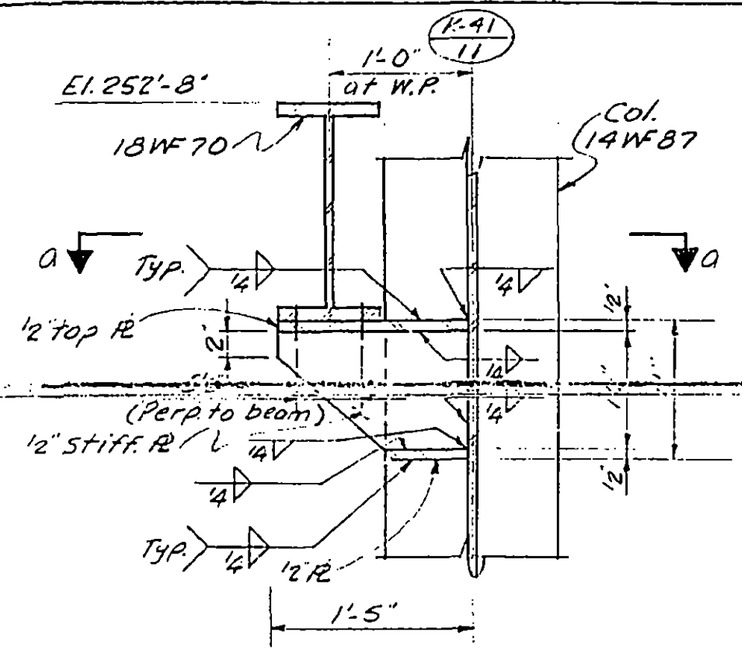

ELEVATION

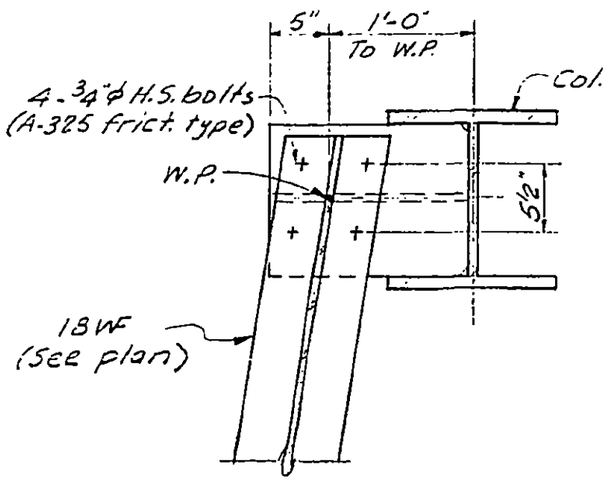

Section a-a

LICENSED PROFESSIONAL ENGINEER
LESLIE E. ROBERTSON
No. 34360
UNIVERSITY OF THE STATE OF NEW YORK

DESIGNED
DRAWN
REVIEWED

12-JK1-49

SKILLING - HELLE - CHRISTIANSEN - ROBERTSON Structural & Civil Engineers

PROJECT THE WORLD TRADE CENTER | TITLE BEAM CONNECTION DETAILS | DATE 10-20-67

REVISIONS

1-5-68

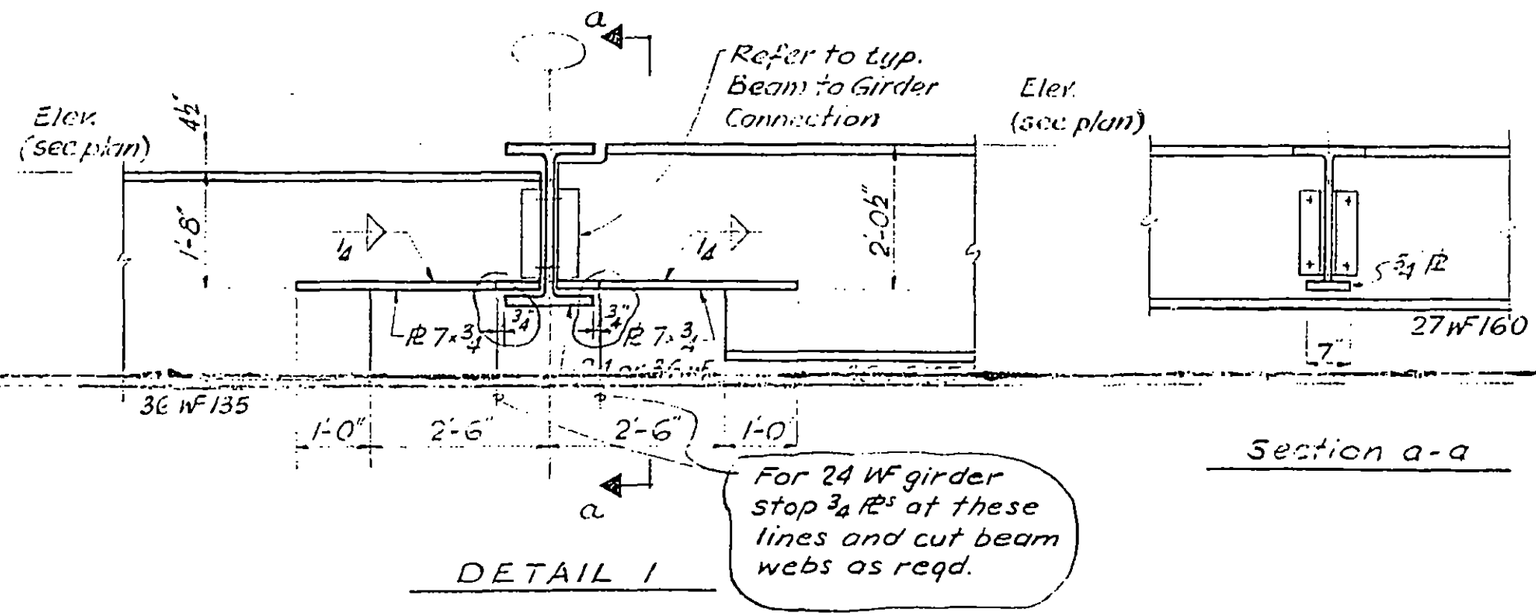

DETAIL 1

Section a-a

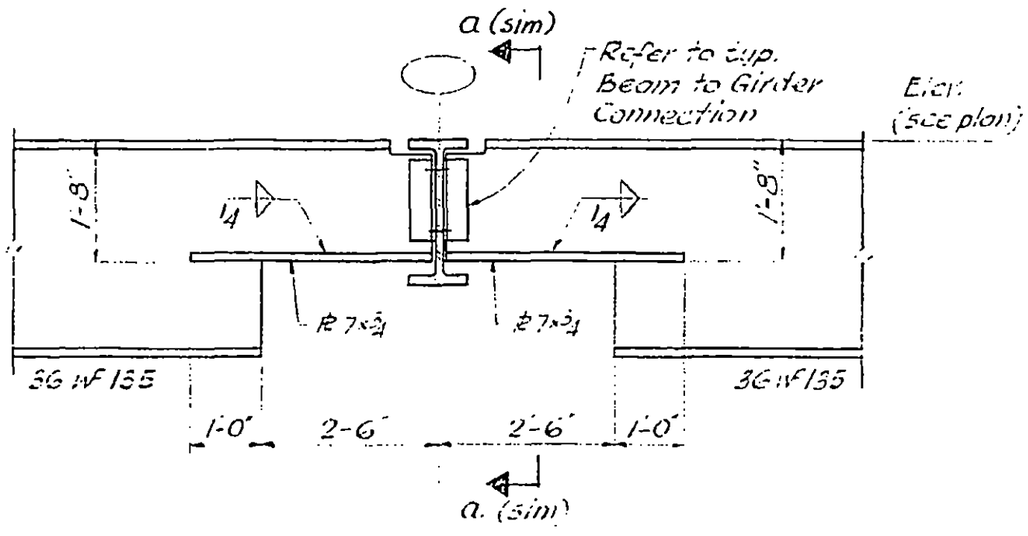

DETAIL 2

LICENSED PROFESSIONAL ENGINEER LESLIE E. ROBERTSON No. 34360 STATE OF NEW YORK

12-JK1-50

SKILLING - HELLE - CHRISTIANSEN - ROBERTSON Structural & Civil Engineers

PROJECT THE WORLD TRADE CENTER | TITLE BEAM CONNECTION DETAILS | DATE 10-20-67

REVISIONS

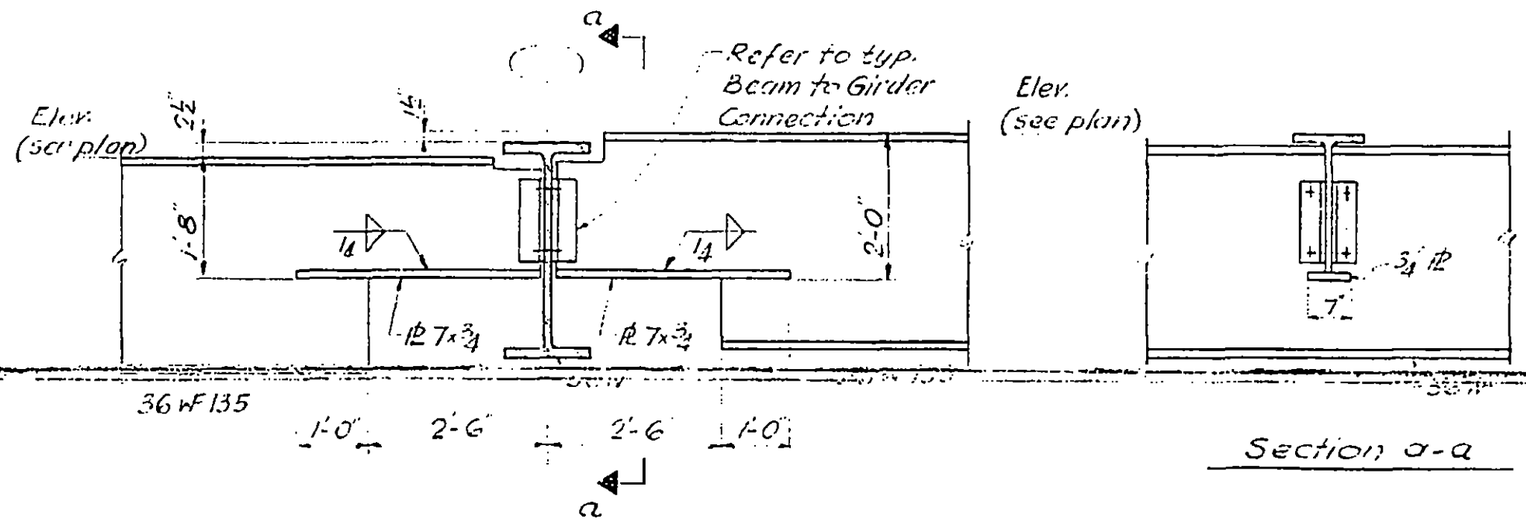

DETAIL 3

Section a-a

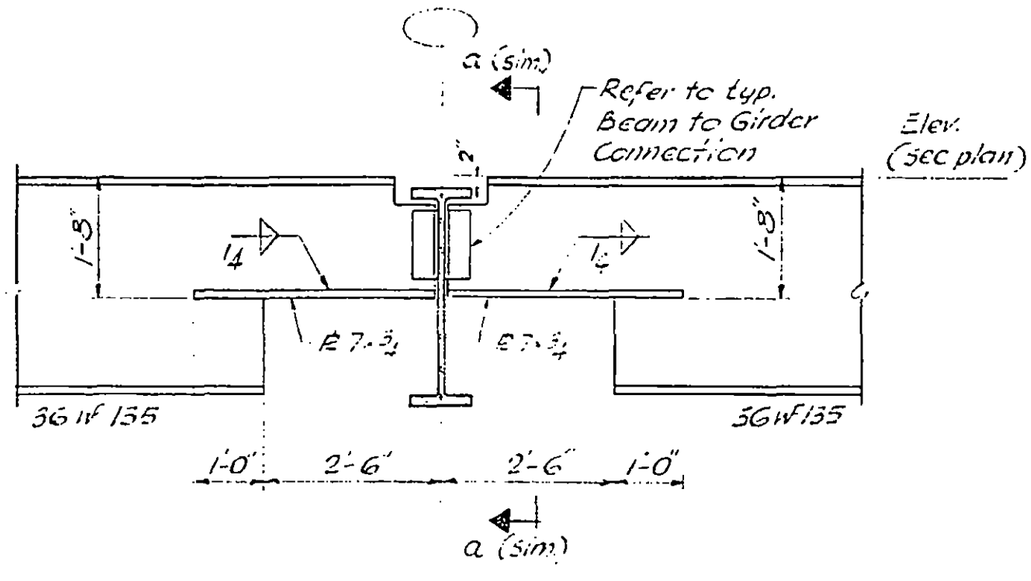

DETAIL 4

LICENSED PROFESSIONAL ENGINEER LESLIE E. ROBERTSON No. 28360 UNIVERSITY OF THE STATE OF NEW YORK

12-JKI-51

SKILLING - HELLE - CHRISTIANSEN - ROBERTSON Structural & Civil Engineers

PROJECT	TITLE	DATE
THE WORLD TRADE CENTER	BEAM CONNECTION DETAIL	10-20-67

REVISIONS

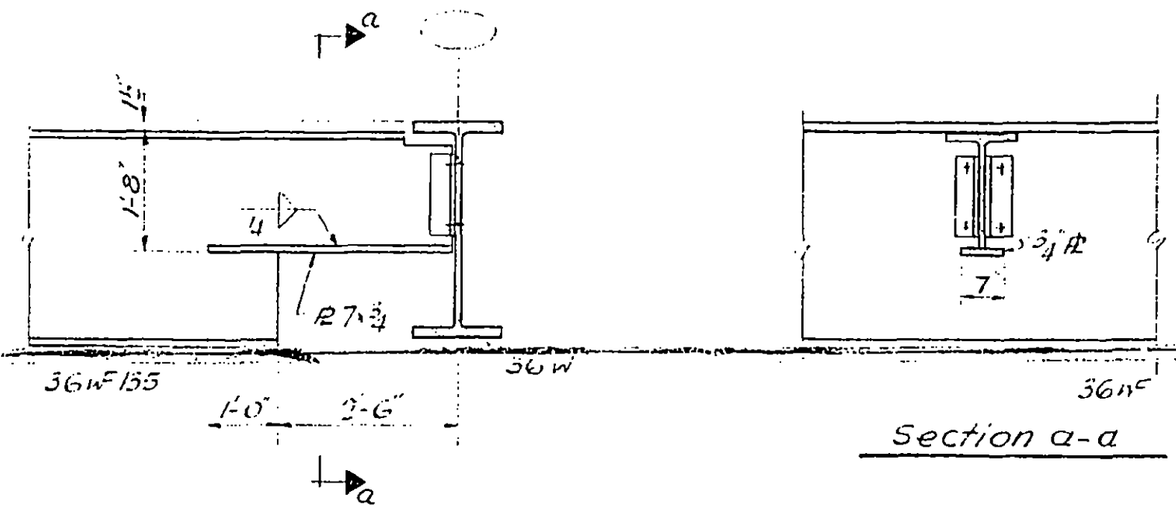

Section a-a

DETAIL 5

LICENSED PROFESSIONAL ENGINEER
LESLIE E. ROBERTSON
No. 34360
UNIVERSITY OF THE STATE OF NEW YORK

12-JR1-52

SKILLING - HELLE - CHRISTIANSEN - ROBERTSON Structural & Civil Engineers

PROJECT THE WORLD TRADE CENTER | TITLE BEAM TO COL. CONN. FOR COL'S WITHIN REFRIG. RM. AREA | DATE 11-24-67

REVISIONS

6-7-68

TYPE OF CONNECTIONS

COLUMN No.	FLOOR AT EL. 257'				BELOW FLOOR EL. 284'			
	N	S	E	W	N	S	E	W
K31-3							II	
K31-4	III	III	I-A					
K31-5	III	III	I	I-A	III	III	II	II
K31-6	III	III	I	I	III	III	II	II
K31-7	III	III	I	I	III	III	II	II
K31-9	III	III	I	I	III	III	II	II
K31-10	III	III	I	I			II	II
K31-11	I	I	III	III				
K31-12	I	I	III	III				
K29-4		I						

TYPE OF CONNECTIONS

COLUMN No.	FLOOR AT EL. 257'				BELOW FLOOR EL. 284'			
	N	S	E	W	N	S	E	W
K35-2							II	
K35-3	III	III	I-A					
K35-4	III	III	I	I-A	III	III	II	II
K35-5	III	III	I	I	III	III	II	II
K35-6	III	III	I	I	III	III	II	II
K35-8	III	III	I	I	III	III	II	II
K35-9	III	III	I	I	III	III	II	II
K35-10	III	III	I	I		III		II
K35-11	I	I	III	III				
K35-12	I	I	III	III				
K70-4				III				
K70-5				III				
K70-6				III				

NOTES:

1. Provide the connections called out in the schedule to all columns shown. Some or a portion of these connections may have to be removed after the determination of exact beam sizes and locations within this area — (subject to the final machine layout in refrigeration room)
2. Refer to the following drawings for detail of connections:-
   Type I & I-A — 12-JK1-54
   Type II — 12-JK1-55
   Type III — 12-JK1-56

LICENSED PROFESSIONAL ENGINEER LESLIE E. ROBERTSON No. 34360 UNIVERSITY OF THE STATE OF NEW YORK

12-JK1-53

SKILLING - HELLE - CHRISTIANSEN - ROBERTSON Structural & Civil Enginoors

PROJECT THE WORLD TRADE CENTER | TITLE BEAM TO COL. CONN. FOR COL'S WITHIN REFRIG. RM. AREA | DATE 11-24-67

REVISIONS

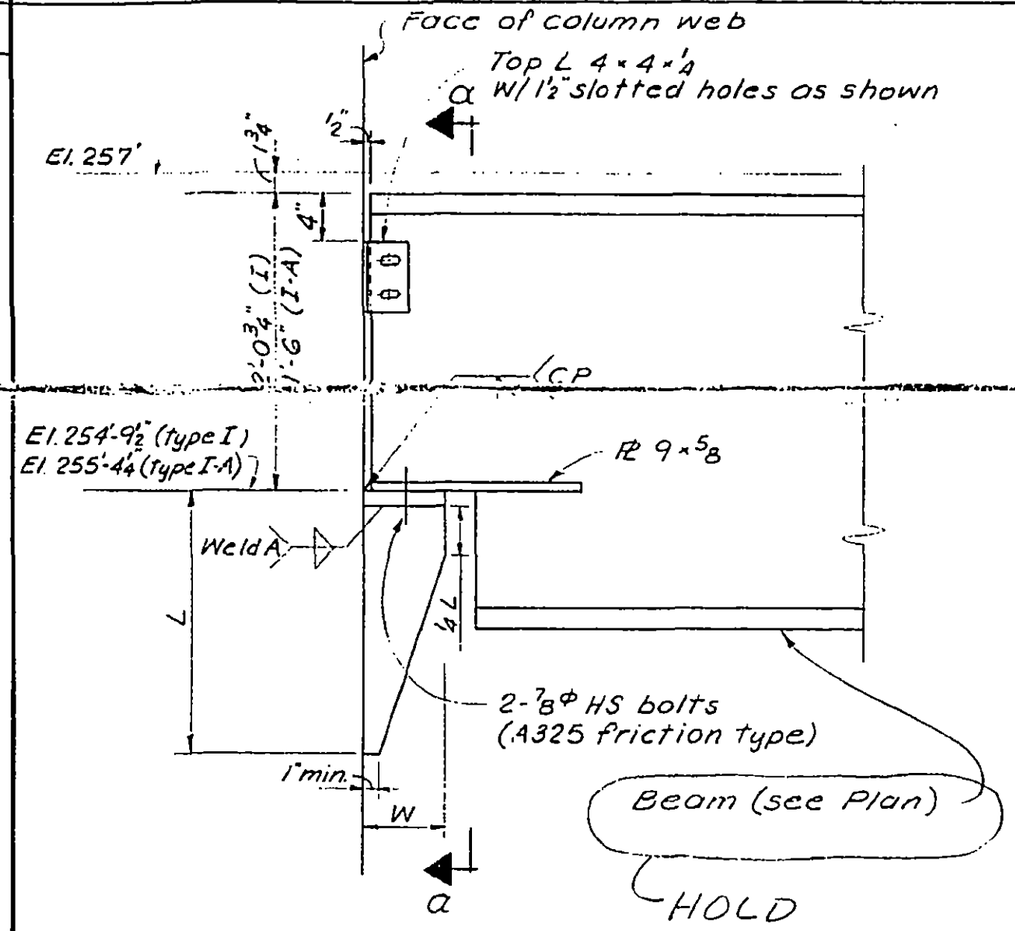

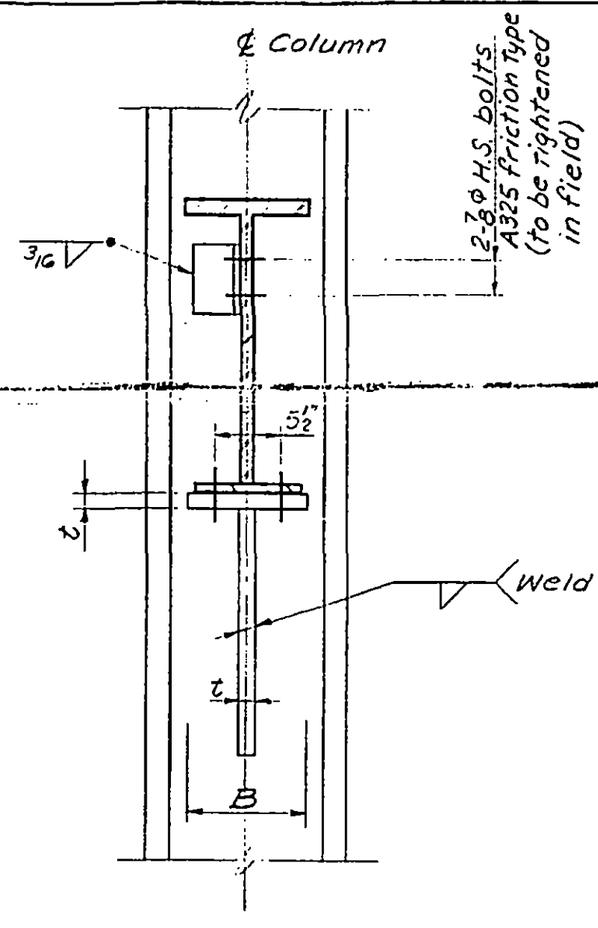

Section a-a

	TYPE I	TYPE I-A
L	1'-10"	1'-3"
W	7"	4"
B	10"	8 1/2"
t	1 3/8"	1/2"
WELD A	7/16"	3/8"
WELD B	7/16" *	3/8"

* Use 1/2" weld for column @ web thickness greater than 2/4.
All welds to be E70 xx.

TYPE I & TYPE I-A

Provide this type of connection to columns within refrigeration room area.
(See schedule on 12-JKI-53 for locations)

LICENSED PROFESSIONAL ENGINEER
LESLIE E. ROBERTSON
No. 34360
UNIVERSITY OF THE STATE OF NEW YORK

12-JKI-54

SKILLING - HELLE - CHRISTIANSEN - ROBERTSON Structural & Civil Engineers

PROJECT THE WORLD TRADE CENTER | TITLE BEAM TO COL. CONN. FOR COL'S WITHIN REFRIG. RM. AREA | DATE 11-24-67

REVISIONS

11-27-68

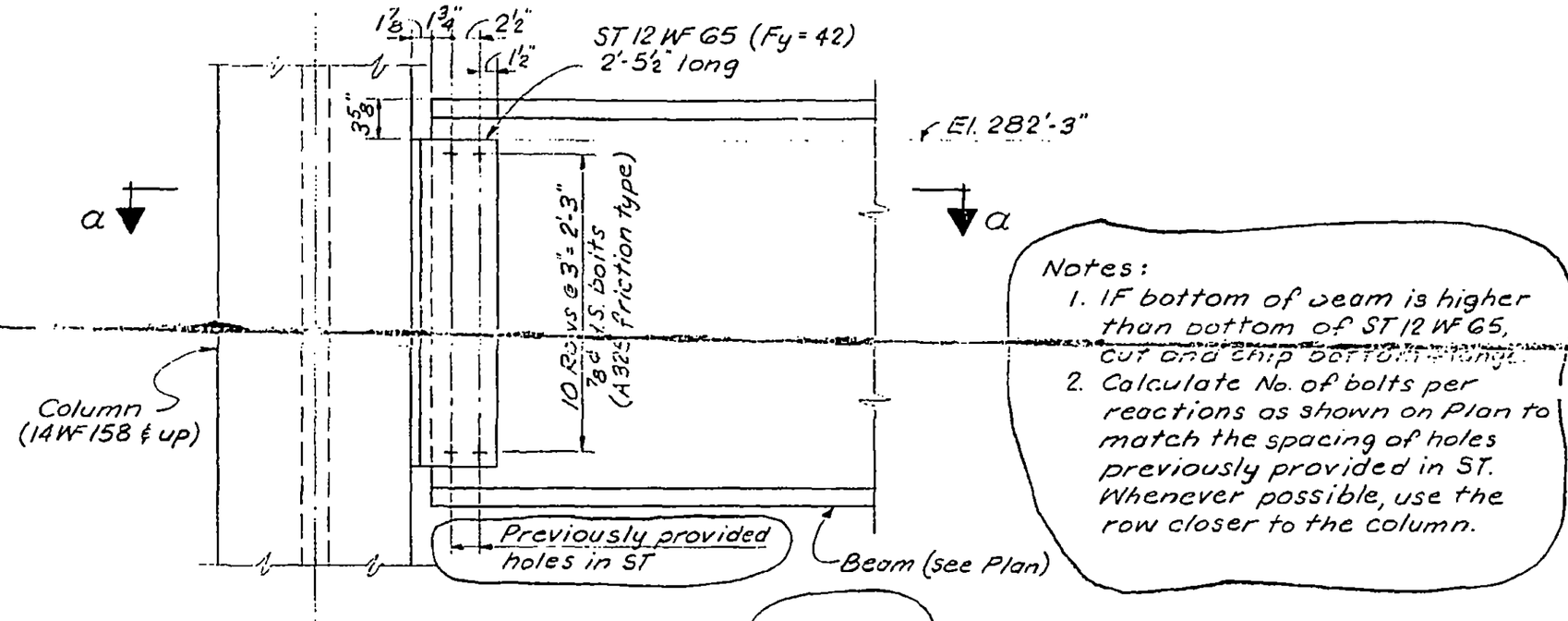

Notes:
1. IF bottom of beam is higher than bottom of ST 12 WF 65, cut and chip bottom flange.
2. Calculate No. of bolts per reactions as shown on Plan to match the spacing of holes previously provided in ST. Whenever possible, use the row closer to the column.

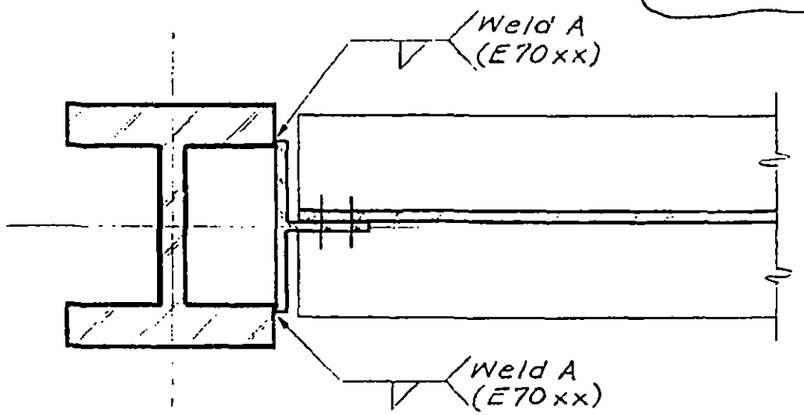

Section a-a

WELD A:
3/8" weld for columns with flange thickness 2 1/4" and less.
1/2" weld for columns with flange thickness greater than 2 1/4".
Provide full return at top.

TYPE II

Provide this type of connection to columns within refrigeration room area.
(See schedule on 12-JK1-53 for location)

LICENSED PROFESSIONAL ENGINEER
LESLIE E. ROBERTSON
No. 34360
UNIVERSITY OF THE STATE OF NEW YORK

12-JK1-55

SKILLING - HELLE - CHRISTIANSEN - ROBERTSON Structural & Civil Engineers

PROJECT THE WORLD TRADE CENTER | TITLE BEAM TO COL. CONN. FOR COL'S WITHIN REFRIG. RM. AREA | DATE 11-24-67

REVISIONS

11-27-68

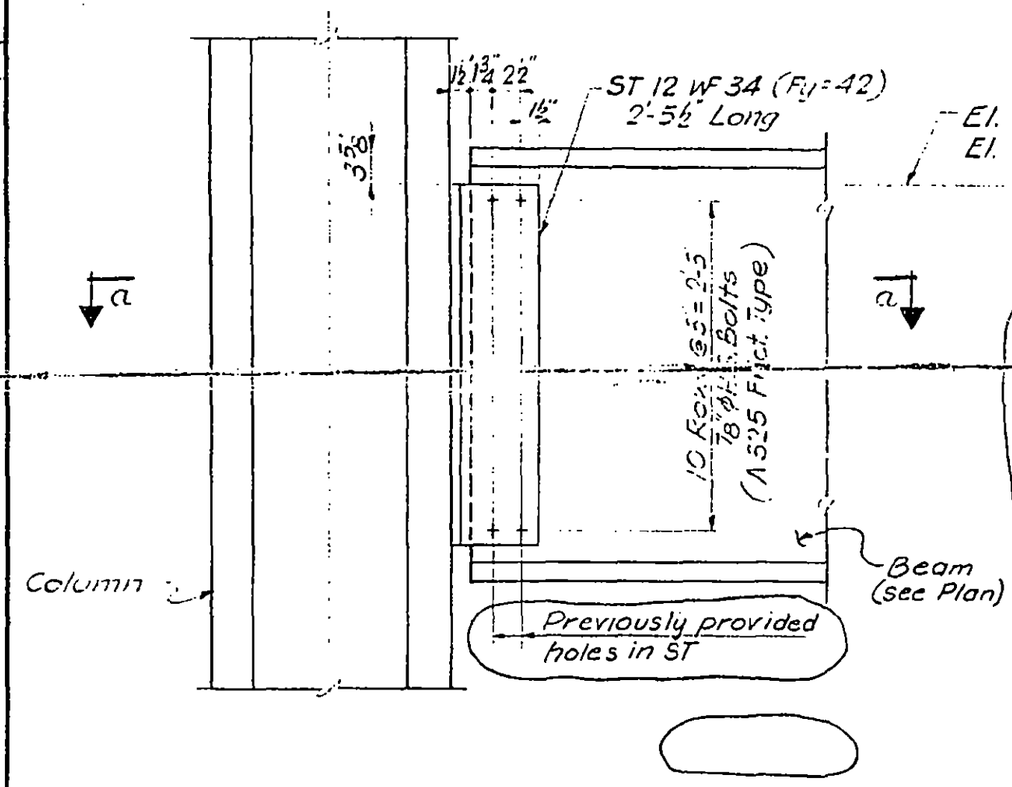

Notes:
1. IF bottom of beam is higher than bottom of ST 12 WF 34, cut and chip bottom flange.
2. Calculate No. of bolts per reactions as shown on Plan to match the spacing of holes previously provided in ST. Whenever possible, use the row closer to the column.

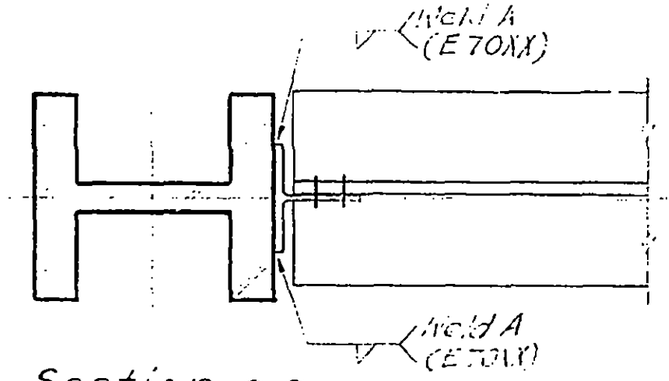

Section a a

Provide this type of connection to columns [illegible]

(See schedule on 12-JKI-53 for location)

TYPE III

WELD A:

⅜" weld for Col. with flange thickness 2¼" and less

½" weld for Col. with flange thickness greater than 2¼"

Provide 1" return at top.

LICENSED PROFESSIONAL ENGINEER
LESLIE E. ROBERTSON
No. 34360
UNIVERSITY OF THE STATE OF NEW YORK

12-JKI-56

SKILLING, HELLE, CHRISTIANSEN, ROBERTSON — Structural & Civil Engineers

PROJECT THE WORLD TRADE CENTER | TITLE BEAM TO COL. CONN. FOR COL'S WITHIN REFRIG. RM. AREA | DATE 10-15-68

REVISIONS

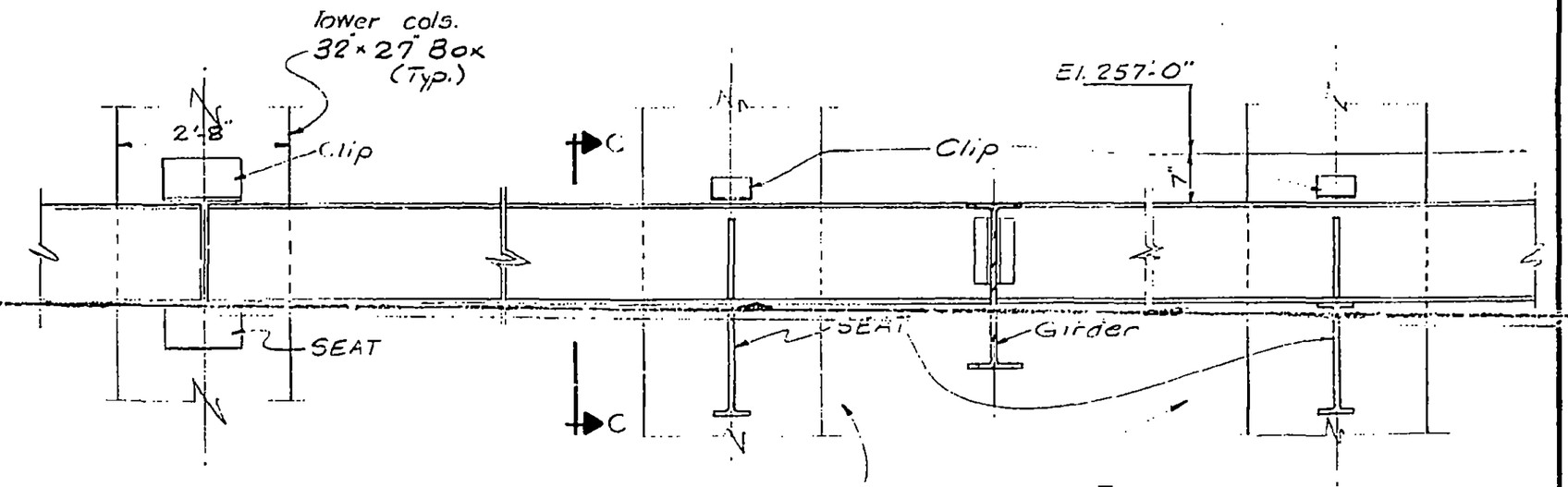

DETAIL 'B'

Use at cols. not adjacent to a girder.

DETAIL 'A'

Typ. at cols. adjacent to Girder.

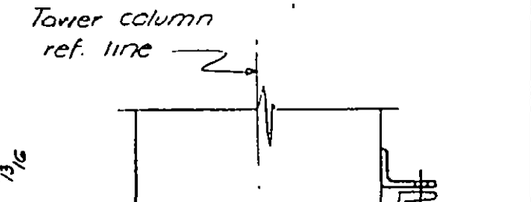

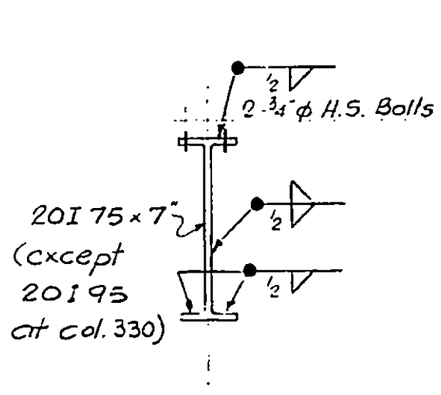

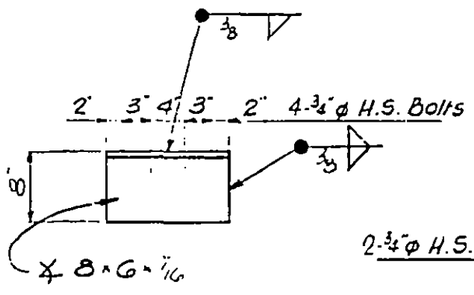

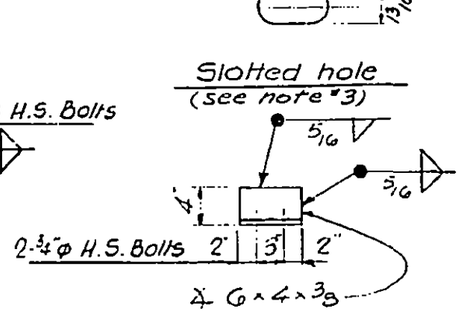

SEAT FOR DETAIL 'A'

SEAT FOR DETAIL 'B'

(Reverse = clip for Detail 'B')

CLIP FOR DETAIL 'A'

SECTION C-C

Notes

1. All H.S. Bolts to be A-325 friction type, ¾" dia.
2. All welding to be E 70xx
3. Holes in bot. flg. of L's to be slotted longitudinally; in seats & clips transversely.

DRAWN

REVIEWED

12-JK1-56A

LICENSED PROFESSIONAL ENGINEER — LESLIE E. ROBERTSON — No. 34360 — UNIVERSITY OF THE STATE OF NEW YORK

SKILLING - HELLE - CHRISTIANSEN - ROBERTSON Structural & Civil Engineers

PROJECT THE WORLD TRADE CENTER | TITLE CONNECTION DETAIL AT COLUMN K31-9 & K31-10 | DATE 11-24-67

REVISIONS

1-10-68

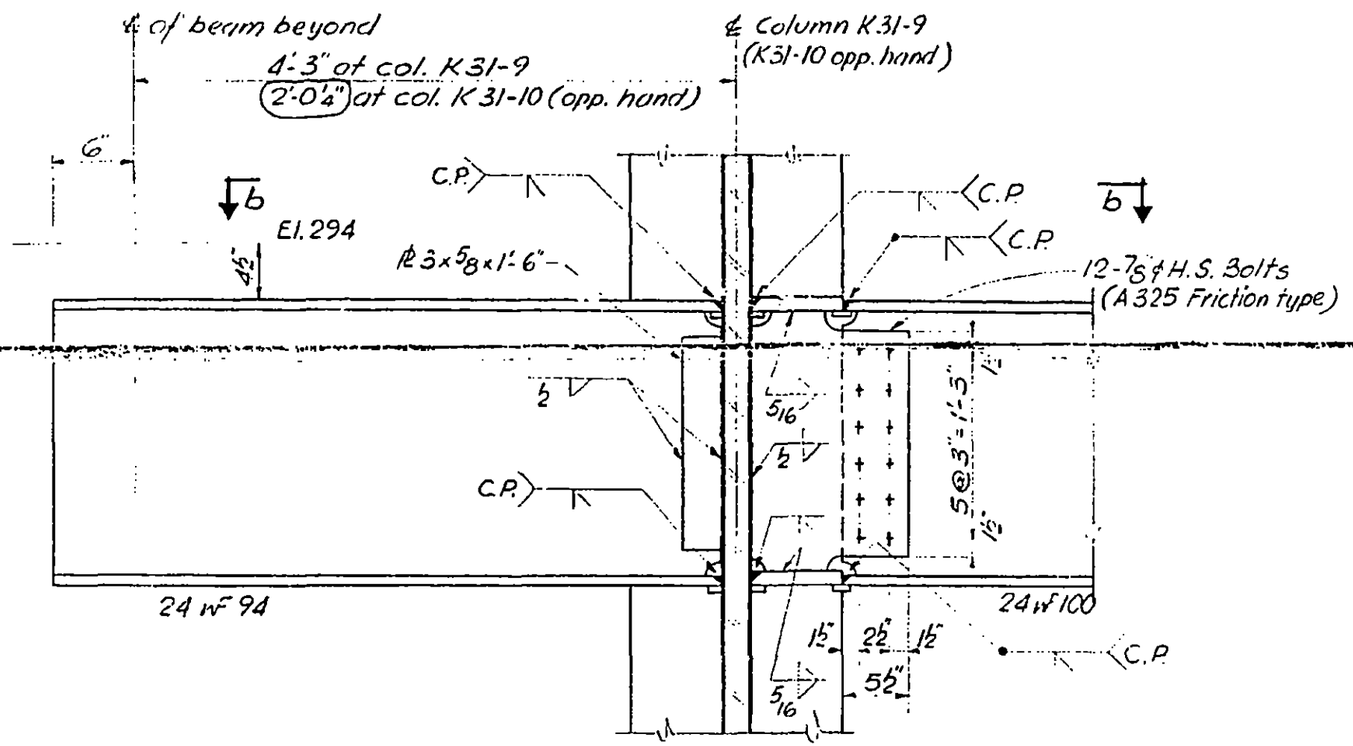

Section a-o

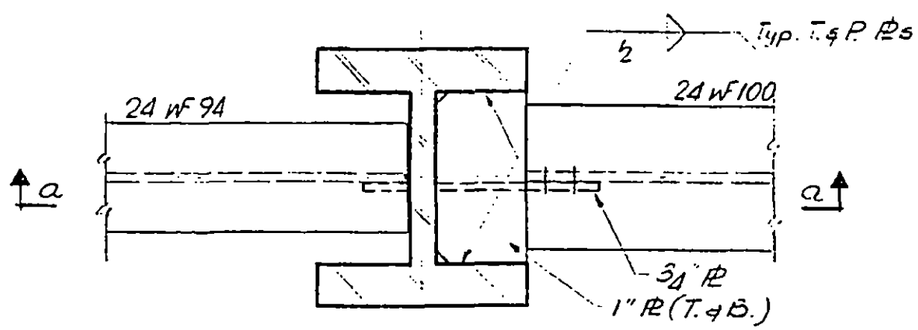

Section b-b

LICENSED PROFESSIONAL ENGINEER
LESLIE E. ROBERTSON
No. 34360
UNIVERSITY OF THE STATE OF NEW YORK

12-JK1-57

SKILLING - HELLE - CHRISTIANSEN - ROBERTSON Structural & Civil Engineers

PROJECT THE WORLD TRADE CENTER | TITLE CONNECTION DETAIL AT COLUMN J15-5 | DATE 11-24-67

REVISIONS

2-16-68

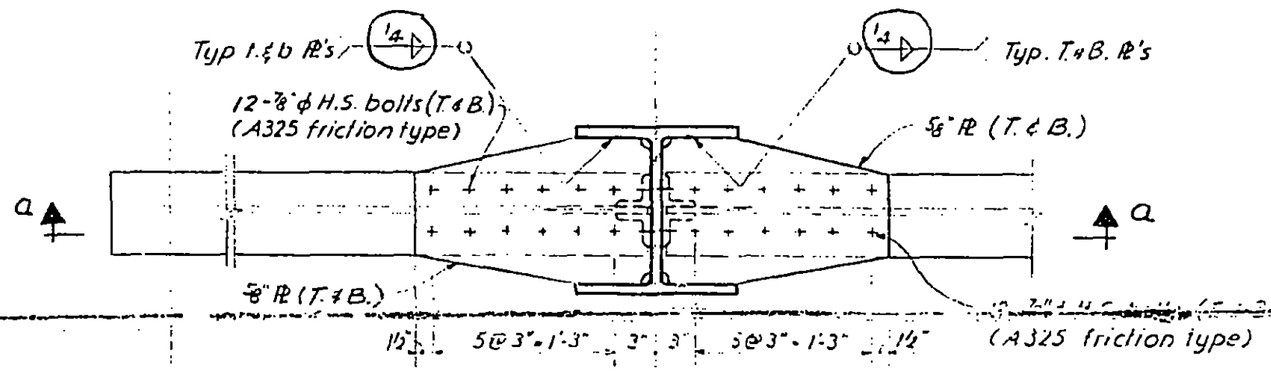

PLAN

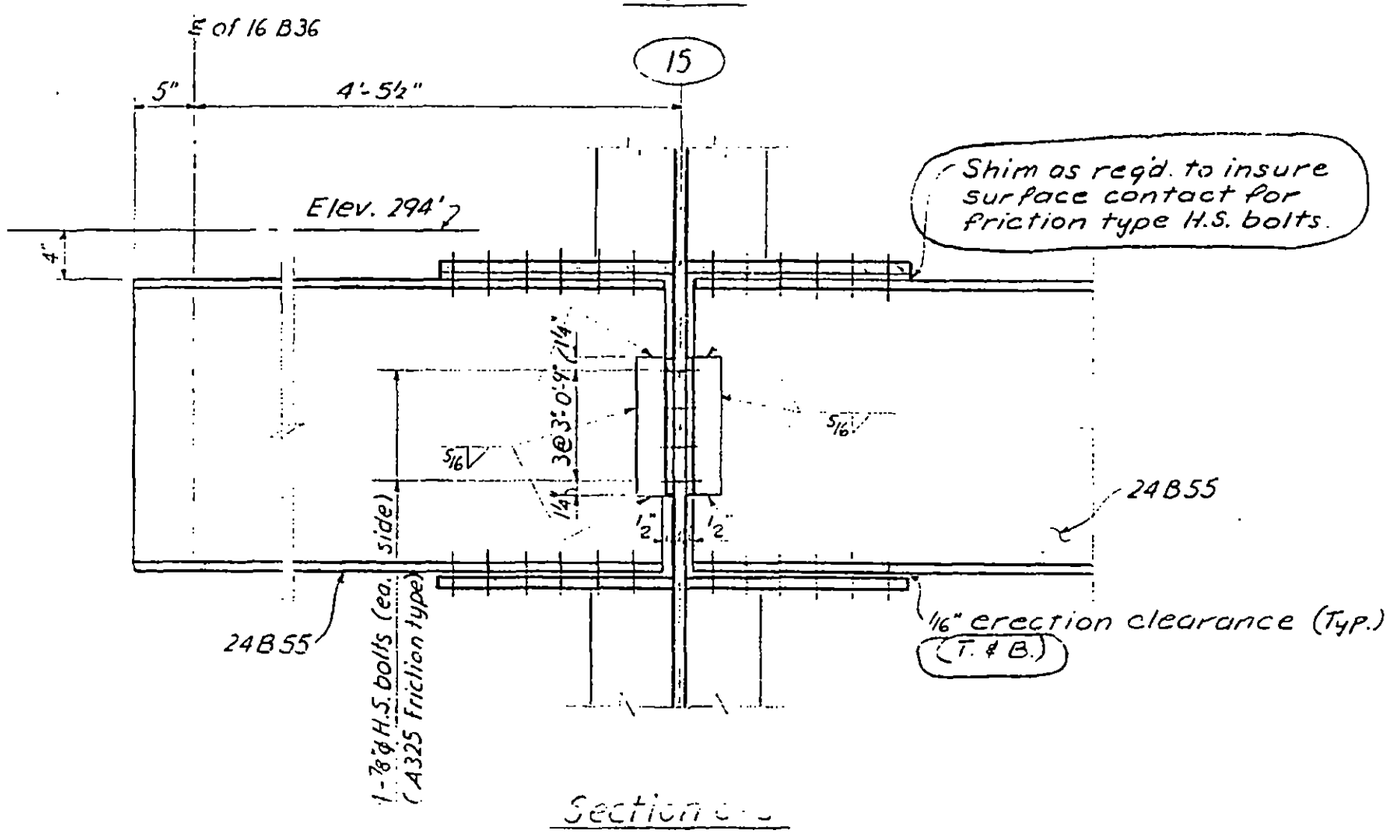

Section a-a

LICENSED PROFESSIONAL ENGINEER
LESLIE E. ROBERTSON
No. 34360
UNIVERSITY OF THE STATE OF NEW YORK

12-JK1-58

SKILLING - HELLE - CHRISTIANSEN - ROBERTSON Structural & Civil Engineers

PROJECT THE WORLD TRADE CENTER | TITLE BEAM CONNECTION DETAILS | DATE 1-5-68

REVISIONS

2-9-68
4-5-68
9-4-68
12-3-68
4-18-69

DETAIL No.	ELEV. AT TOP OF BEAM		BEAM SIZES		SEAT		
	Upper beam	Lower beam	Upper beam	Lower beam	Size	Stiff. PL K	Weld b
A-1	309'-6"	307'-4"	18B40	36WF300	8WF35		
A-2	308'-5½"	307'-1"	14WF30	24WF76	Fill PL only		
A-3	309'-4"	305'-1"	24WF76	36WF150	27WF84	3/8"	1/4"
A-4	309'-4"	305'-1"	36WF194	36WF194	14WF119	1/2"	1/4"
A-5	309'-4"	306'-4"	18B40	36WF194	18B40		
A-6	309'-4"	305'-1"	21B44	36WF194	30WF99		
A-7	309'-6"	305'-3"	21WF49	33WF130	30WF99		
A-8	309'-2"	305'-10"	18B35	36WF245	21WF73		
A-9	309'-3"	307'-0"	18WF55	27WF94	8WF58		
B-1	309'-6¼"	306'-1"	18B35	30WF99	24B55		
B-2	309'-3"	305'-5"	24B55	36WF260	21WF55		
B-3	309'-3"	305'-8"	24B55	36WF170	18WF55		

NOTE:
See 12-JK1-62 for detail.

LESLIE E. ROBERTSON
No. 30360
REGISTERED PROFESSIONAL ENGINEER
STATE OF NEW YORK

DRAWN S.C.

REVIEWED E.L.

12-JK1-59

SKILLING - HELLE - CHRISTIANSEN - ROBERTSON Structural & Civil Engineers

PROJECT: THE WORLD TRADE CENTER | TITLE: BEAM CONNECTION DETAILS | DATE: 1-5-68

REVISIONS

3-21-69

DETAIL No.	ELEV. AT TOP OF BEAM		BEAM SIZES		SEAT			
	Upper beam	Lower beam	Upper beam	Lower beam	Size	Stiff. PL K	Weld a	Weld b
C-1	309'-6¼"		18 B 35					
		306'-9"	18 B 40	33 WF 240	14 WF 38			
D-1	309'-6"	307'-4"	21 WF 55	24 WF 68	ST 13 WF 42	¼	⅜	¼
D-2	306'-10"	305'-1"	18 WF 45	16"2 x 29#I	ST 9 WF 25		5/16	
E-1	309'-3"	307'-0"	27 WF 94	24 WF 68		½	5/16	5/16

NOTE:
See 12-JK1-63 & 64 for detail.

DRAWN
S.C.

REVIEWED
E.L.

12-JK1-60

SKILLING - HELLE - CHRISTIANSEN - ROBERTSON Structural & Civil Engineers

PROJECT THE WORLD TRADE CENTER | TITLE BEAM CONNECTION DETAILS | DATE 1-5-68

REVISIONS

7-19-68

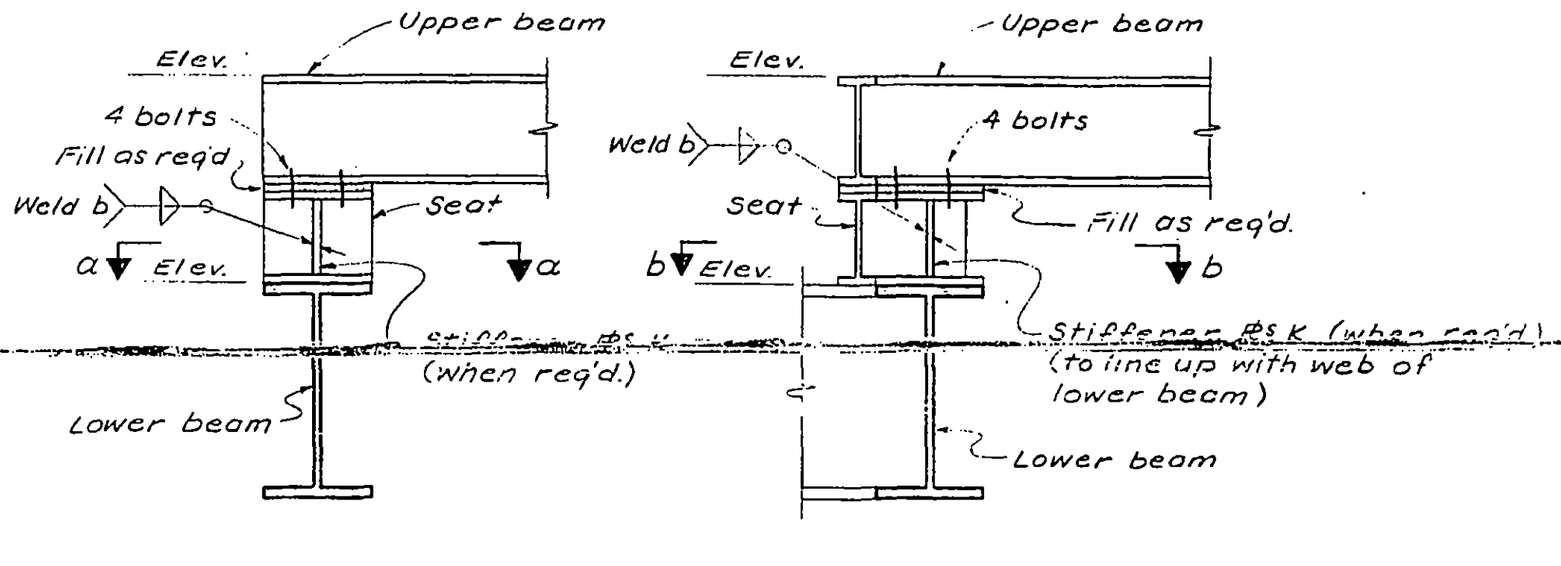

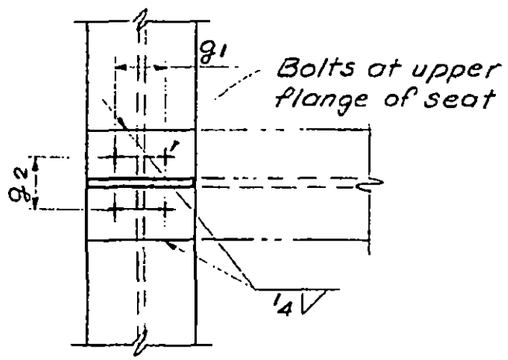

Section a-a

TYPE A SERIES

(see schedule on 12-JK1-59)

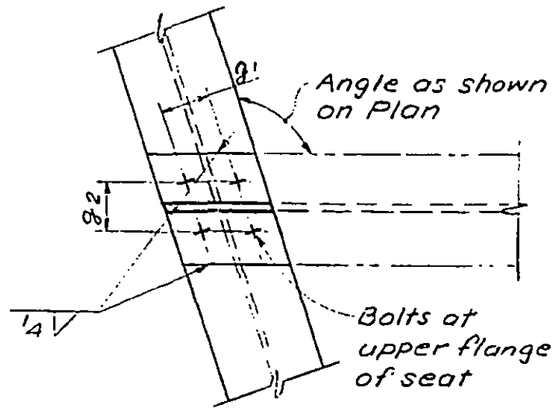

Section b-b

TYPE B SERIES

(see schedule on 12-JK1-59)

NOTES:

1. All seats to have Fy same as that of upper beam. (Stiff. PL with Fy=42)
2. Length of all seats to be the same as flange width of lower beam.
3. g1 to be g-value of lower beam.
   g2 to be g-value of upper beam.
4. All bolts shown to be 7/8" Φ H.S. bolts A325 friction type.
5. Where seat is not called out on schedule, use fill PLs only.

LICENSED PROFESSIONAL ENGINEER No. 34310 STATE OF NEW YORK

12-JK1-62

SKILLING - HELLE - CHRISTIANSEN - ROBERTSON Structural & Civil Engineers

PROJECT THE WORLD TRADE CENTER | TITLE BEAM CONNECTION DETAILS | DATE 1-5-68

REVISIONS

7-19-68

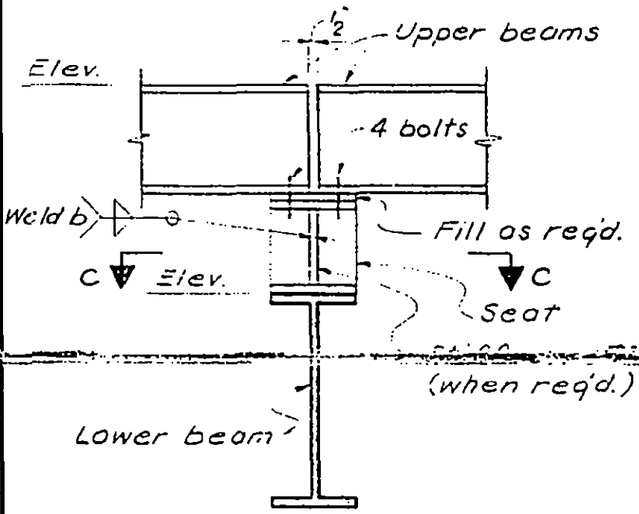

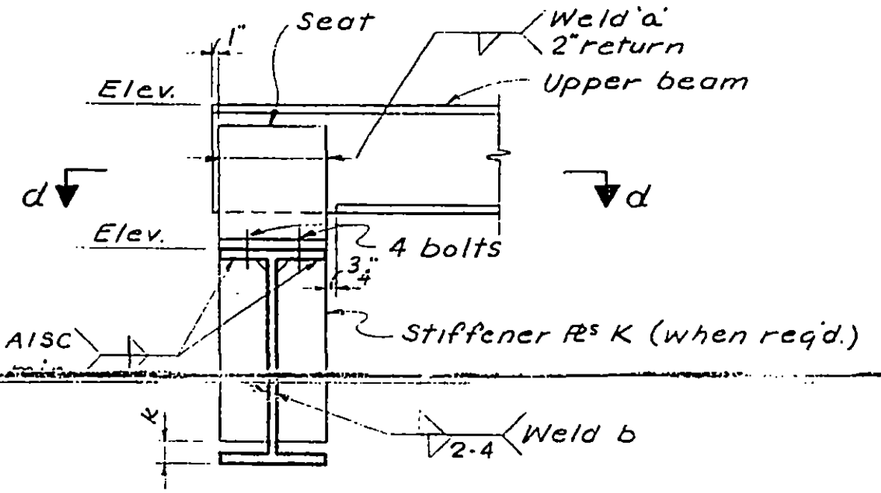

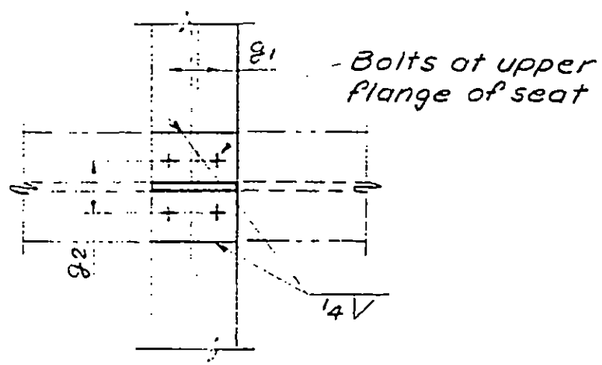

Section C-C

TYPE C SERIES

(see schedule on 12-JK1-60)

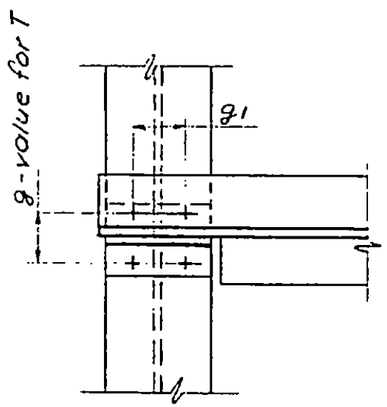

Section d-d

TYPE D SERIES

(see schedule on 12-JK1-60)

NOTES:

1. All seats to have Fy same as that of upper beam (Stiff. Rs with Fy=42)
2. Length of all seats to be the same as flange width of lower beam.
3. g1 to be g-value of lower beam.
   g2 to be g-value of upper beam.
4. All bolts shown to be ⅞"Φ H.S. bolts A325 friction type.
5. Where seat is not called out on schedule, use fill Rs only.

LICENSED PROFESSIONAL ENGINEER LESLIE E. ROBERTSON No. 34360 STATE OF NEW YORK

12-JK1-63

SKILLING, HELLE, CHRISTIANSEN, ROBERTSON — Structural & Civil Engineers

PROJECT: THE WORLD TRADE CENTER | TITLE: BEAM CONNECTION DETAILS | DATE: 3-21-69

REVISIONS

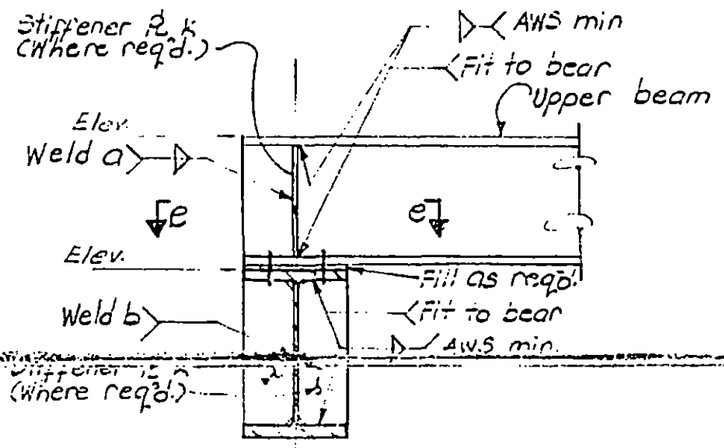

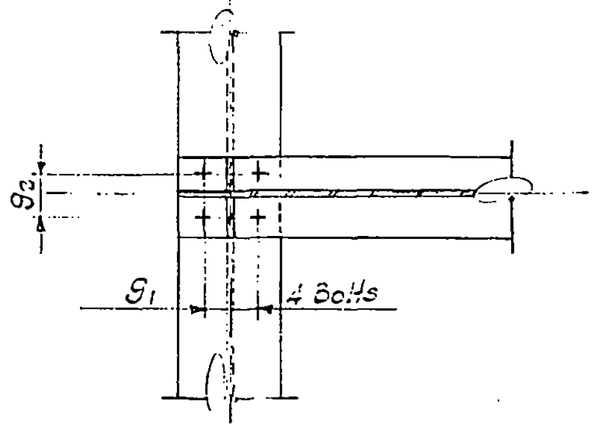

Section e-e
TYPE 'E' SERIES
(See schedule on 12JK1-60)

Notes:

1. All seats to have Fy same as that of upper beam. (Stiffener PL with Fy=42)
2. Length of all seats to be the same as flange width of lower beam.
3. "g_1" to be "g" value of lower beam. "g_2" to be "g" value of upper beam.
4. All bolts shown to be 7/8"ø H.S. bolts A325 friction type.
5. Where seat is not called out on schedule, use fill PLs only.

LICENSED PROFESSIONAL ENGINEER
LESLIE E. ROBERTSON
No. 34360
UNIVERSITY OF THE STATE OF NEW YORK

DESIGNED

DRAWN S.T.M.

REVIEWED E.L.

12-JK1-64

SKILLING - HELLE - CHRISTIANSEN - ROBERTSON Structural & Civil Engineers

PROJECT THE WORLD TRADE CENTER | TITLE BEAM CONNECTION DETAILS | DATE 1-5-68

REVISIONS

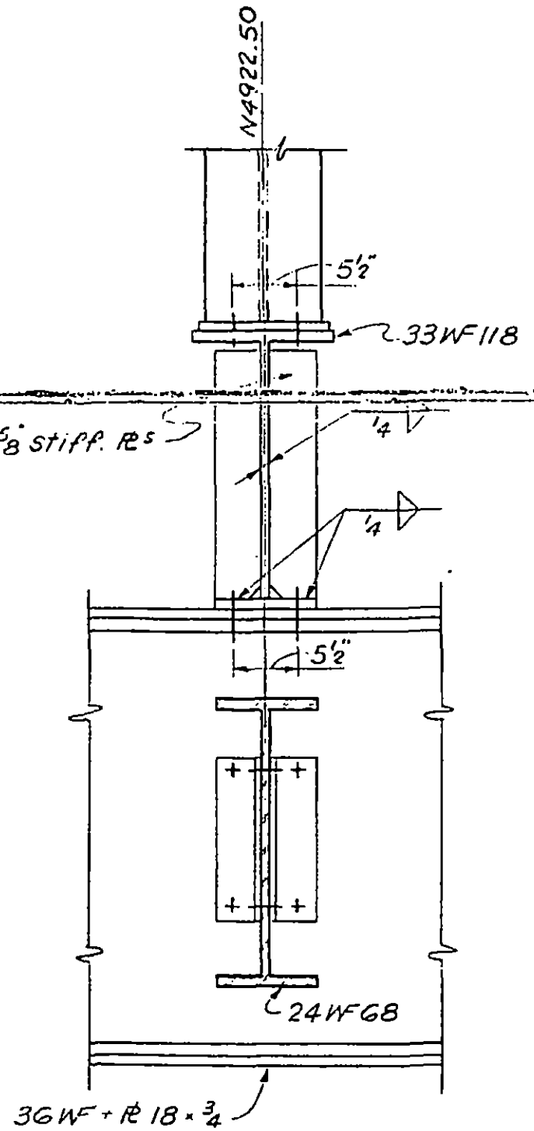

Section a-a

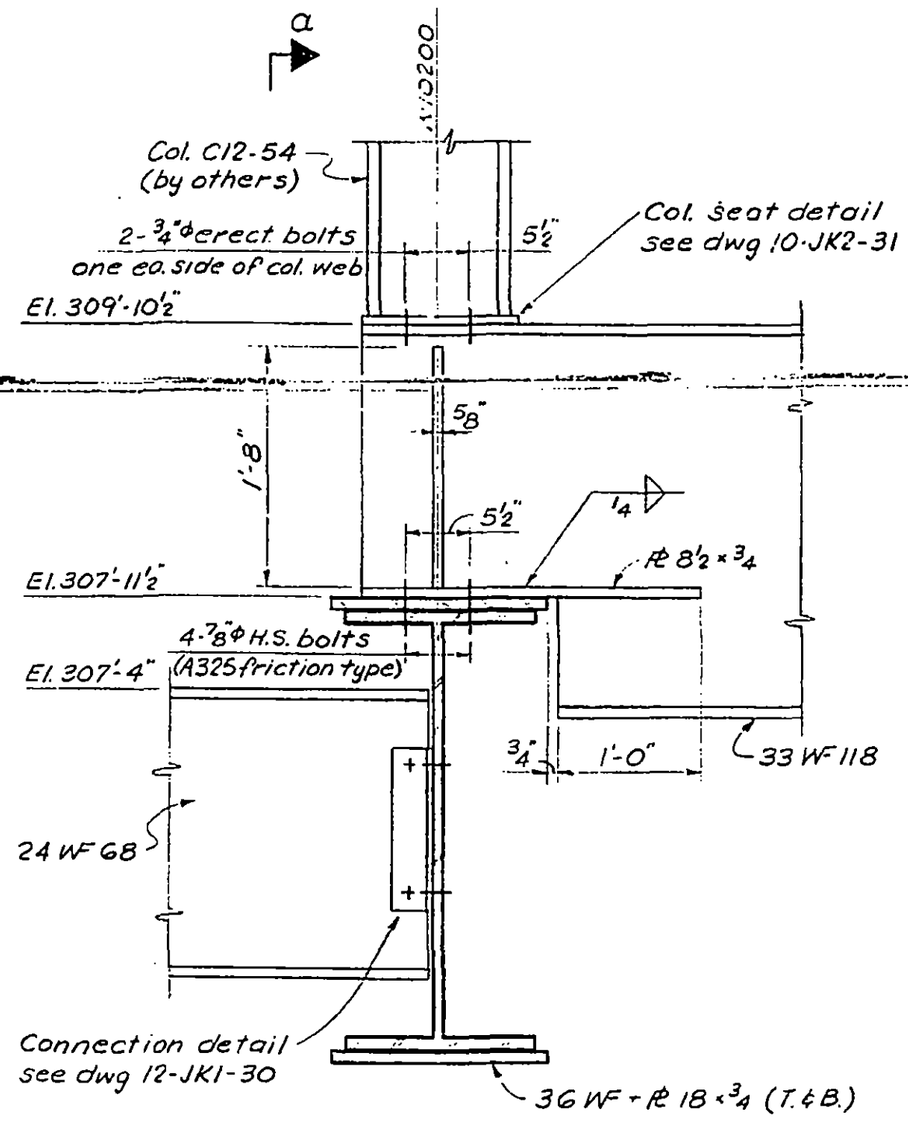

LICENSED PROFESSIONAL ENGINEER
LESLIE E. ROBERTSON
No. 34250
STATE OF NEW YORK

12-JK1-65

SKILLING - HELLE - CHRISTIANSEN - ROBERTSON Structural & Civil Engineers

PROJECT THE WORLD TRADE CENTER | TITLE BEAM CONNECTION DETAILS | DATE 1-5-68

REVISIONS

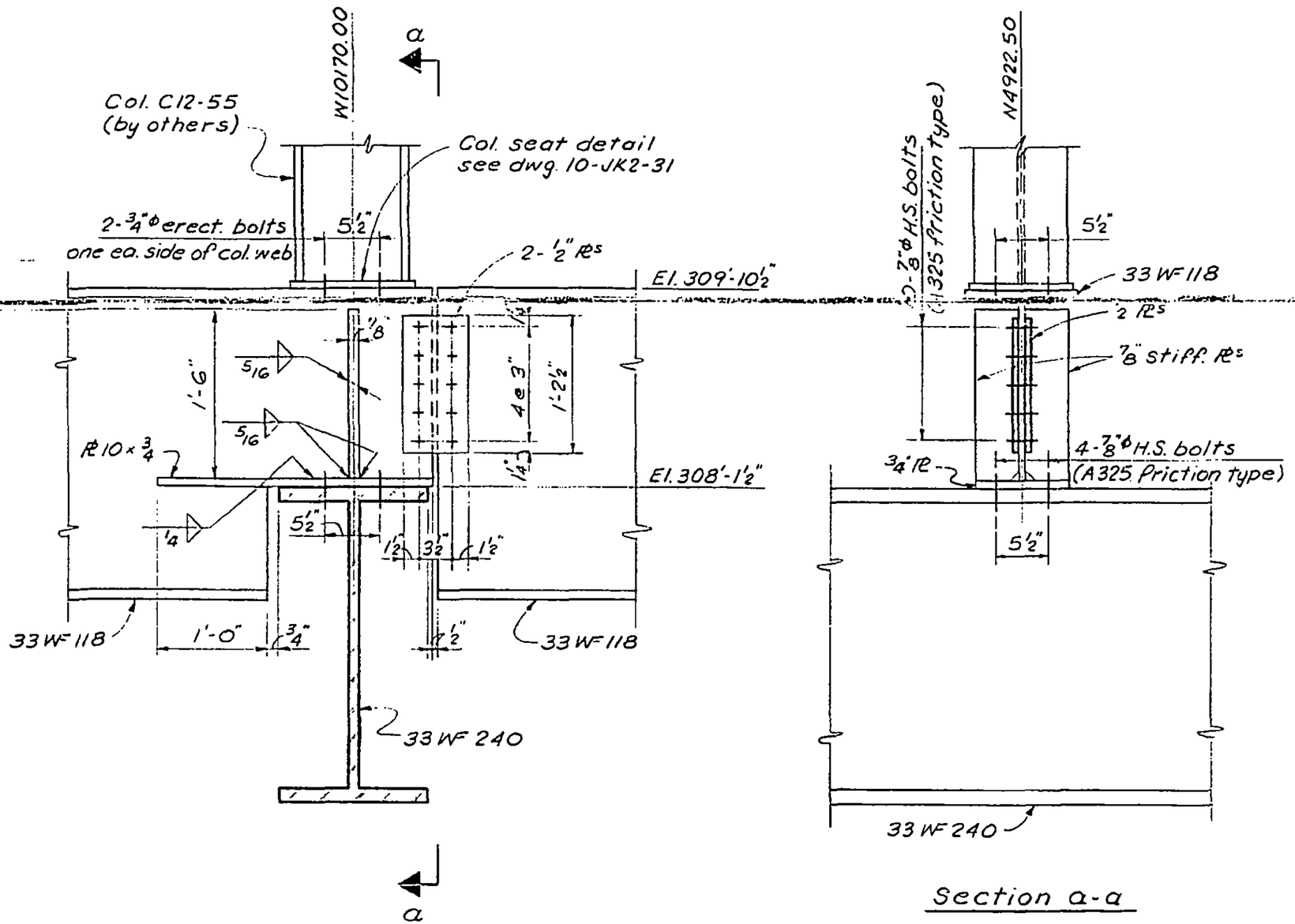

Section a-a

12-JK1-66

1042-L

SKILLING - HELLE - CHRISTIANSEN - ROBERTSON Structural & Civil Enginoors

PROJECT THE WORLD TRADE CENTER | TITLE BEAM TO COL. CONN. - WHERE COL. SPLICE 3" ABOVE FLOOR | DATE 1-29-68

REVISIONS
3-19-68
11-11-68
4-18-69
5-29-69

SCHEDULE

DETAIL NO.	COLUMN SIZE	BEAM SIZE	CONNECTION TYPE	CONNECTION LENGTH	NO. OF BOLTS 1ST ROW	NO. OF BOLTS 2ND ROW	WELD A
11	14 WF 426	21 WF 55	A	1'- 2½"	5	2	½
12	14 WF 398	21 WF 55	A	1'- 2½"	5	2	½
13	14 WF 398	36 WF 135	A	1'- 8½"	7	4	½
14	14 WF 150	21 WF 55	B	1'- 2½"	5	2	5/16
15	14 WF 211	21 WF 55	B	1'- 2½"	5	3	5/16
16	14 WF 426	36 WF 160	A	2'- 2½"	9	5	½
17	14 WF 426	33 WF 130	A	2'- 5½"	10	5	½
18	14 WF 398	33 WF 130	A	2'- 5½"	10	5	½
19	14 WF 398	30 WF 108	A	1'- 8½"	7	0	½
20	14 WF 398	24 B 55	A	0'- 11½"	4	2	½
21	14 WF 176	24 B 55	B	0'- 11½"	4	2	5/16
22	14 WF 184	24 B 55	B	0'- 11½"	4	2	5/16
23	14 WF 167	30 WF 116	A	1'- 5½"	6	2	5/16
24	14 WF 237	33 WF 141	B	0'- 11½"	4	0	3/8
* 25	14 WF 500	18 WF 50	A	1'- 2½"	5	0	½
* 26	14 WF 730	18 WF 45	A	0'- 11½"	4	0	½
* 27	14 WF 730	21 WF 55	A	1'- 5½"	6	0	½
* 28	14 WF 314	24 WF 68	A	1'- 5½"	6	0	½
* 29	14 WF 320 + PL's	16 B 26	A	1'- 2½"	5	3	½
* 30	14 WF 320 + PL's	14 B 22	A	0'- 11½"	4	3	½
* 31	14 WF 320 + PL's	21 B 44	A	1'- 5½"	6	4	½
* 32	14 WF 605	27 WF 84	A	1'- 8½"	7	2	½
* 33	14 WF 320 + PL's	33 WF 118	A	1'- 8½"	7	5	½
* 34	14 WF 550	24 WF 76	A	1'- 5½"	6	2	½
* 35	14 WF 550	36 WF 150	A	1'- 8½"	7	7	½
* 36	14 WF 287	36 WF 150	A	1'- 8½"	7	7	3/8
* 37	14 WF 320 + PL's	33 WF 220	A	1'- 11½"	** 8	** 6	½
* 38	14 WF 320 + PL's	30 WF 132	A	1'- 11½"	** 8	** 2	½
* 39	14 WF 500	30 WF 190	A	1'- 11½"	** 8	** 4	½

Notes:
1. See 12-JK1-68 for connection details.
2. * — beam of elevation other than El. 310 as shown on 12-JK1-68.
3. ** — use 1" ϕ H.S. bolts (A-490 friction type)

REGISTERED PROFESSIONAL ENGINEER LESLIE E. ROBERTSON No. 34360 UNIVERSITY OF THE STATE OF NEW YORK

DRAWN S.C.
REVIEWED E.L.

12-JK1-67

SKILLING - HELLE - CHRISTIANSEN - ROBERTSON Structural & Civil Engineers

PROJECT: THE WORLD TRADE CENTER | TITLE: BEAM TO COLUMN CONN. - WHERE COL. SPLICE 3" ABOVE FL | DATE: 1-29-68

REVISIONS

5-29-69

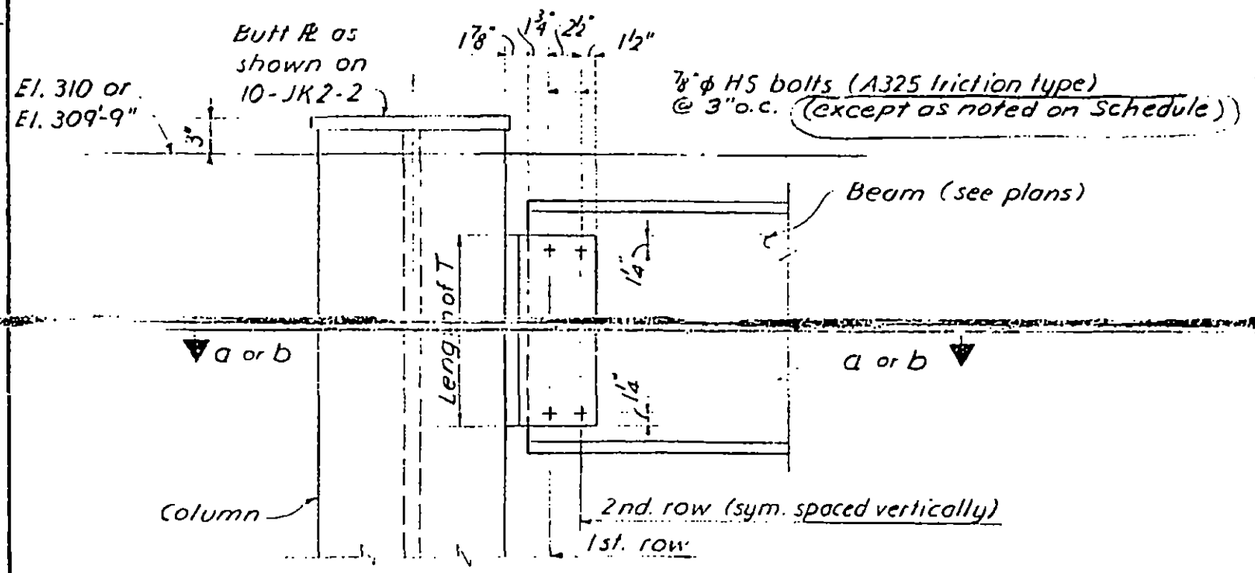

Weld A:
5/16" weld
⅜" weld for col. Fl. over 1½" to 2¼".
½" weld for col. Fl. over 2¼" to 6"
Provide full return at top.

1. Material of T to be A-36
2. See schedule on 12-JK1-67 for length of T & no. of bolts.

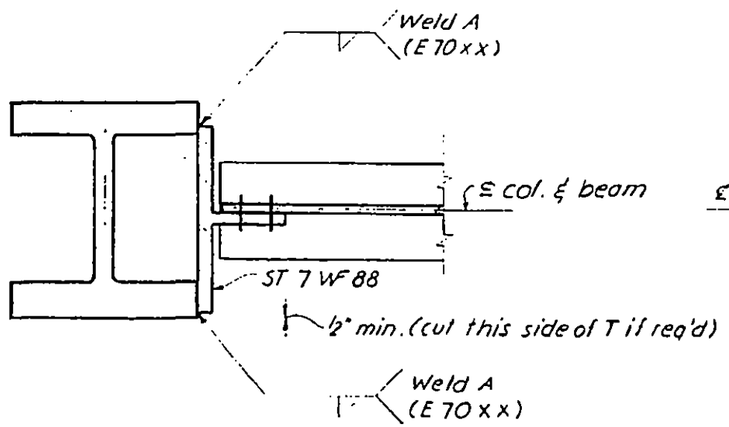

(Type A)

Section a-a

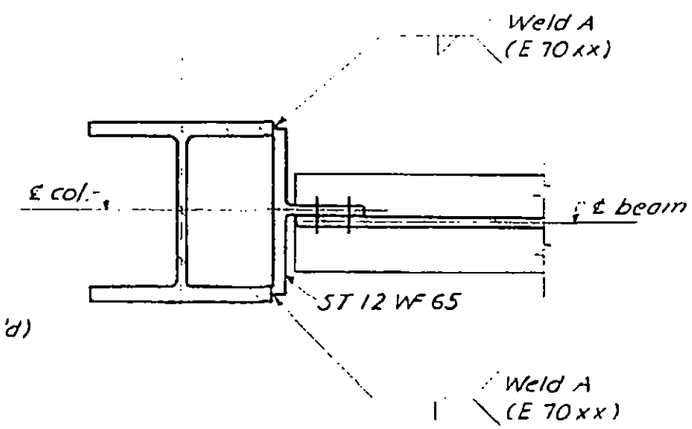

(Type B)

Section b-b

LICENSED PROFESSIONAL ENGINEER
LESLIE E. ROBERTSON
No. 34360
UNIVERSITY OF THE STATE OF NEW YORK

DRAWN
S.C.

REVIEWED
E.L.

12-JK1-68

SKILLING - HELLE - CHRISTIANSEN - ROBERTSON Structural & Civil Engineers

PROJECT THE WORLD TRADE CENTER | TITLE DETAIL OF ELEVATOR SEPARATOR BEAMS | DATE 2-9-68

REVISIONS
6-7-68
6-28-68
2-19-69

ELEVATOR NO	LOCATION OF BEAMS	ELEVATION AT TOP OF BM	LENGTH OF BEAMS	END CONN. DETAILS LEFT	RIGHT
J-1, 2 & 3	EAST OF J-1	323'-6"	9'-7"	A	A
		319'-6"	9'-4½"		
		309'-8"	9'-7"		
		303'-6"			
		293'-8"			
		284'-2"			
		274'-2"			
		262'-6"			
		252'-8"	9'-7"		A
		251'-6"	9'-6"	A	B
		241'-8"	8'-6"	*	*
	WEST OF J-2 WEST OF J-3	323'-6"	9'-7"	A	A
		319'-6"	9'-4½"		
		309'-8"	9'-7"		
		303'-6"			
		293'-8"			
		284'-2"			
		274'-2"			
		264'-2"			
		252'-8"	9'-7"	A	A
		241'-8"	8'-10"	*	*

NOTE:-

1. * No seat Rs. Req'd. Beam end embedded in pocket formed in foundation wall.
2. See Dwg. 12-JK1-70 for type and detail of connection.

LICENSED PROFESSIONAL ENGINEER LESLIE E. ROBERTSON No. 34360 UNIVERSITY OF THE STATE OF NEW YORK

DRAWN S.C.

REVIEWED E.L.

12-JK1-69

SKILLING, HELLE, CHRISTIANSEN, ROBERTSON — Structural & Civil Engineers

PROJECT: THE WORLD TRADE CENTER | TITLE: DETAIL OF ELEVATOR SEPARATOR BEAMS | DATE: 5-26-69

REVISIONS
3-30-70
5-18-70

Elevator No.	Location of beams	Elevation at top of beam	BEAM Size	BEAM Length	END CONN. DETAILS Left	END CONN. DETAILS Right
J-4	North of J-4	321'-7"	6×4×3/8 □	9'-3"	A	A
		315'-4"				
		309'-1"				
		302'-10"				
		296'-7"				A
		290'-4"				A**
		287'-8"		9'-3"	A	C
C-9		309'-10"		8'-10"	C	A
		301'-10"		9'-3½"	A	
		293'-10"		8'-10"		
K-1	North of K-1	321'-7"		9'-3"		
		315'-4"		9'-3"		A
		309'-1"		9'-0"		***
		302'-10"		9'-3"		A
		296'-7"		9'-3"		A
		290'-4"		9'-0"		***
		287'-8"		9'-0"		***
K-2	West of K-2	303'-0"	6×4×3/8 □	8'-2½"		A
		293'-8"	12B19 (Fy-42)	8'-0½"		
		280'-8"	6×4×3/8 □			
		267'-8"				
		256'-8"				
		252'-0"				
		241'-0"	6×4×3/8 □	8'-0½"	A	A

Elevator No.	Location of beams	Elevation at top of beam	BEAM Size	BEAM Length	END CONN. DETAILS Left	END CONN. DETAILS Right
K-3, 4 & 5	South of K-3 South of K-4	323'-6"	6×4×3/8 □	9'-7"	A	A
		319'-6"		9'-4½"		
		309'-8"		9'-7"		
		303'-6"				
		293'-8"				
		284'-2"				
		274'-2"				
		264'-2"				
		252'-8"		9'-7"	A	A
	South of K-3	241'-8"		8'-10"	*	A**
	North of K-5	323'-6"		9'-7"	A	A
		319'-6"		9'-4½"		
		309'-8"		9'-7"		
		303'-6"				
		293'-8"				
		284'-2"				
		274'-2"				
		264'-2"				
		262'-6"				
		252'-8"		9'-7"	A	
		251'-6"		9'-5"	B	A
	South of K-4 North of K-5	241'-8"		8'-0"	*	A**
H-1, 2 & 3	Btw. H-1 & H-2 Btw. H-2 & H-3	321'-2"		9'-3½"	A	A
		307'-2"				
H-4, 5 & 6	Btw. H-4 & H-5 Btw. H-5 & H-6	321'-2"				
		307'-2"		9'-3½"		
H-7, 8 & 9	East of H-7 West of H-8 West of H-9 East of H-9	321'-2"		11'-5"		
		307'-2"		11'-5"		
		293'-2"		11'-5"		
H-10		321'-2"		10'-9"		
		307'-2"		10'-9"		
		293'-2"	6×4×3/8 □	10'-9"	A	A

NOTES:

1. * — no seat ℄ & anchor req'd. Beam end embedded in pocket formed in foundation wall.
2. A** — indicates End Conn. Detail similar to Type A, except no seat ℄ & anchor req'd.
3. See Dwgs 12-JK1-70 & 70A for type & detail of connection.
4. *** — similar to Type A, with 7" embedment in concrete and base ℄ = 4"×5/8"×0'-6" long.

LICENSED PROFESSIONAL ENGINEER — LESLIE E. ROBERTSON — No. 34360 — UNIVERSITY OF THE STATE OF NEW YORK

DESIGNED
DRAWN S.C.
REVIEWED E.L.

12-JK1-69A

SKILLING - HELLE - CHRISTIANSEN - ROBERTSON Structural & Civil Engineers

PROJECT THE WORLD TRADE CENTER | TITLE DETAIL OF ELEVATOR SEPARATOR BEAMS | DATE 2-9-68

REVISIONS

6-7-68
6-28-68
2-19-69
5-26-69

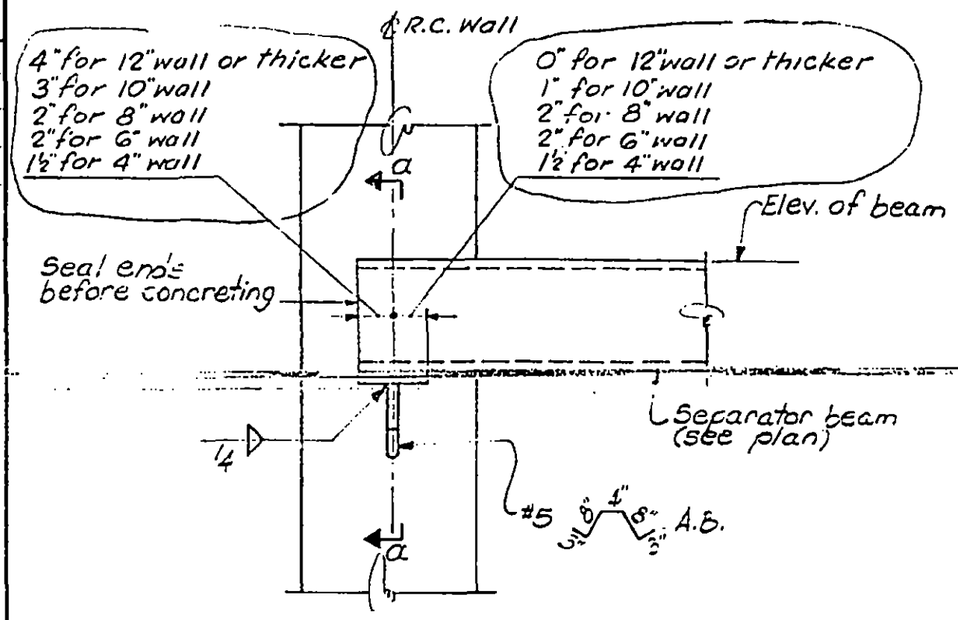

Type A

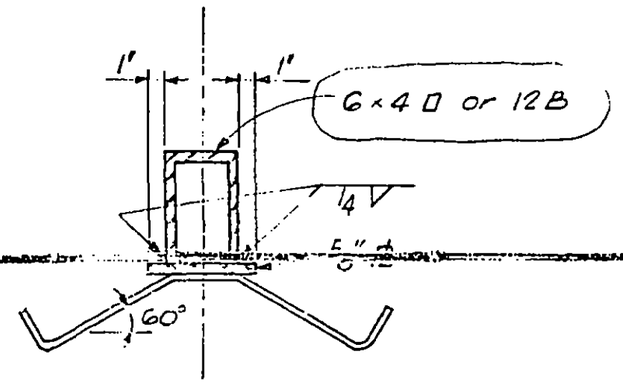

Section a-a

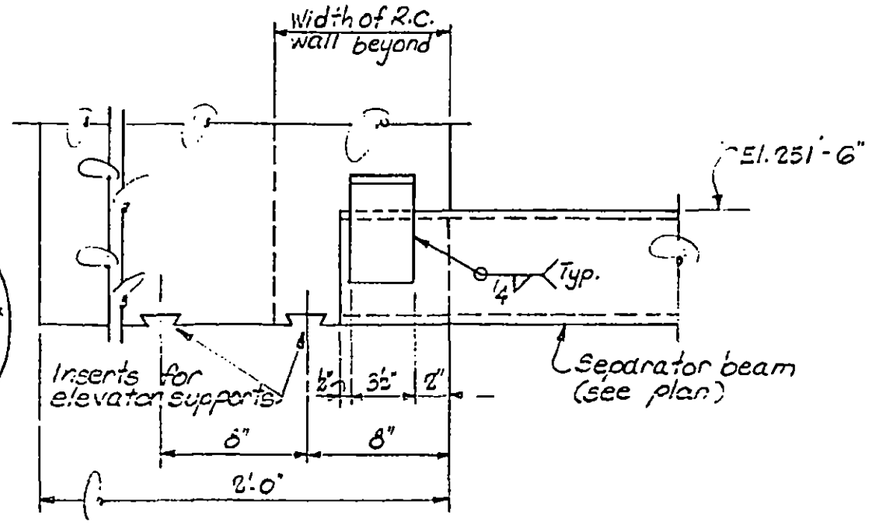

Type B

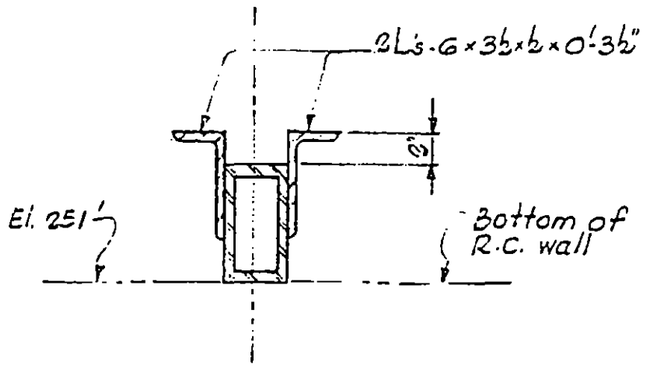

Section b-b

LICENSED PROFESSIONAL ENGINEER
LESLIE E. ROBERTSON
No. 34360
UNIVERSITY OF THE STATE OF NEW YORK

DRAWN
S.C.

REVIEWED
E.L.

12-JK1-70

SKILLING, HELLE, CHRISTIANSEN, ROBERTSON — Structural & Civil Engineers

PROJECT THE WORLD TRADE CENTER | TITLE DETAIL OF ELEVATOR SEPARATOR BEAMS | DATE 5-26-69

REVISIONS

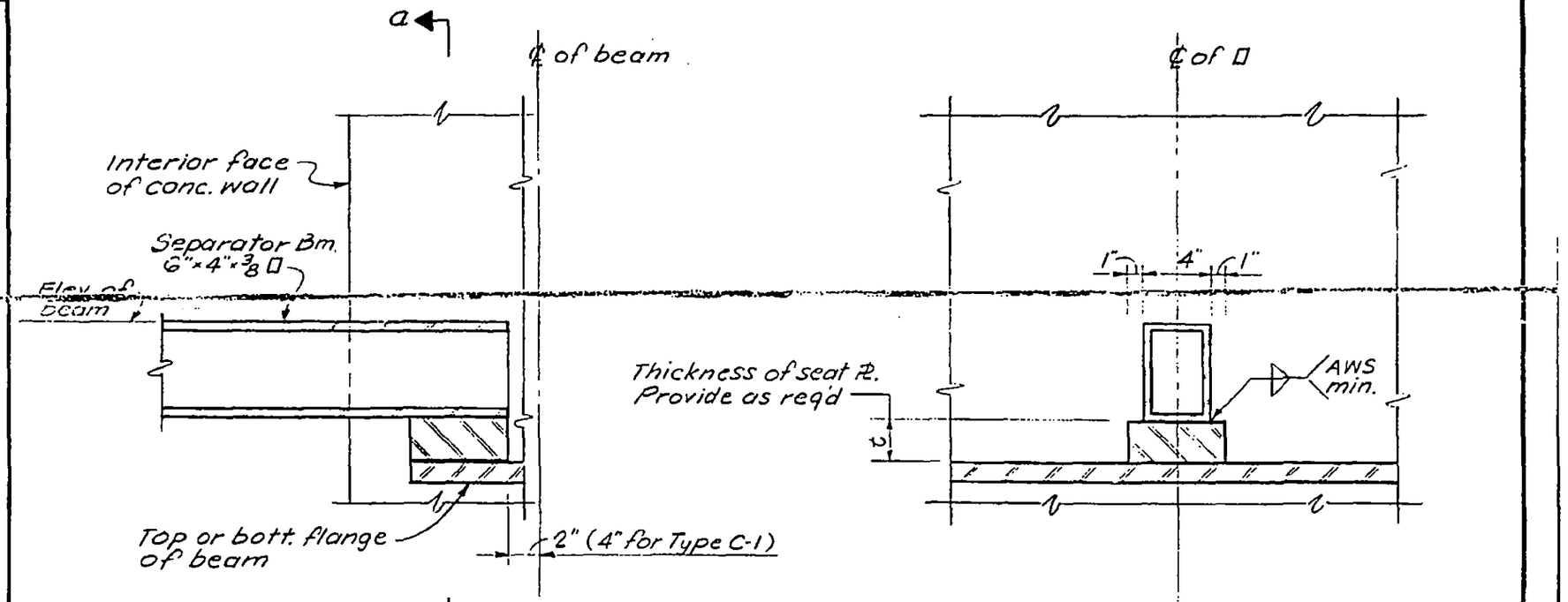

Type C

Section a-a

LICENSED PROFESSIONAL ENGINEER
LESLIE E. ROBERTSON
No. 34360
UNIVERSITY OF THE STATE OF NEW YORK

DESIGNED

DRAWN
S.C.

REVIEWED
E.L.

12-JK1-70A

SKILLING, HELLE, CHRISTIANSEN, ROBERTSON — Structural & Civil Engineers

PROJECT: THE WORLD TRADE CENTER | TITLE: ELEVATOR J-4 "BUMPER" BEAMS | DATE: 5-26-69

REVISIONS

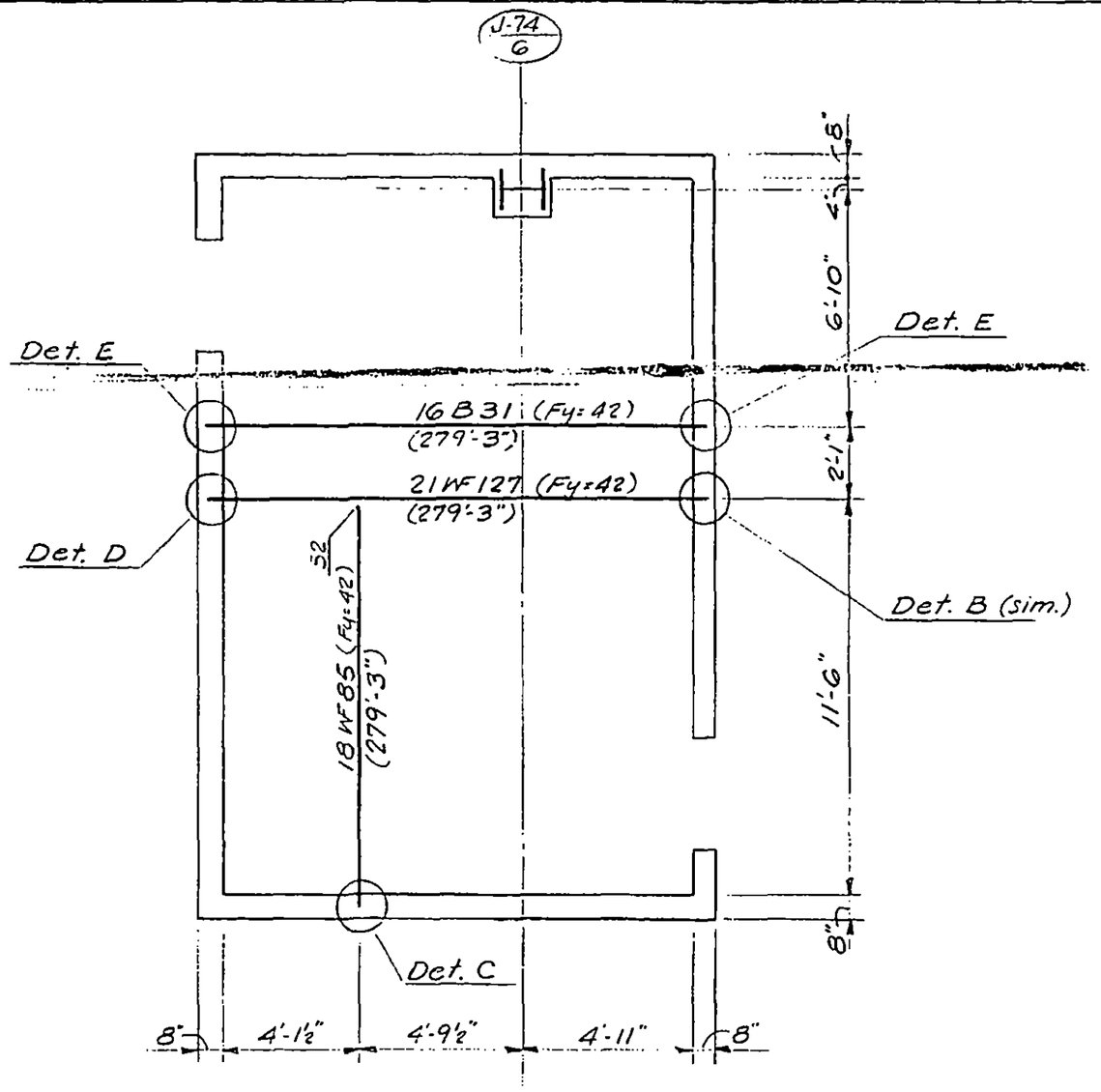

Plan

Note:
For details see 12-JK1-70F

LICENSED PROFESSIONAL ENGINEER
LESLIE E. ROBERTSON
No 34360
UNIVERSITY OF THE STATE OF NEW YORK

DESIGNED

DRAWN
S.C.

REVIEWED
E.L.

12-JK1-70B

SKILLING, HELLE, CHRISTIANSEN, ROBERTSON — Structural & Civil Engineers

PROJECT: THE WORLD TRADE CENTER | TITLE: ELEVATOR C-9 "BUMPER" BEAMS | DATE: 5-26-69

REVISIONS

10-13-69

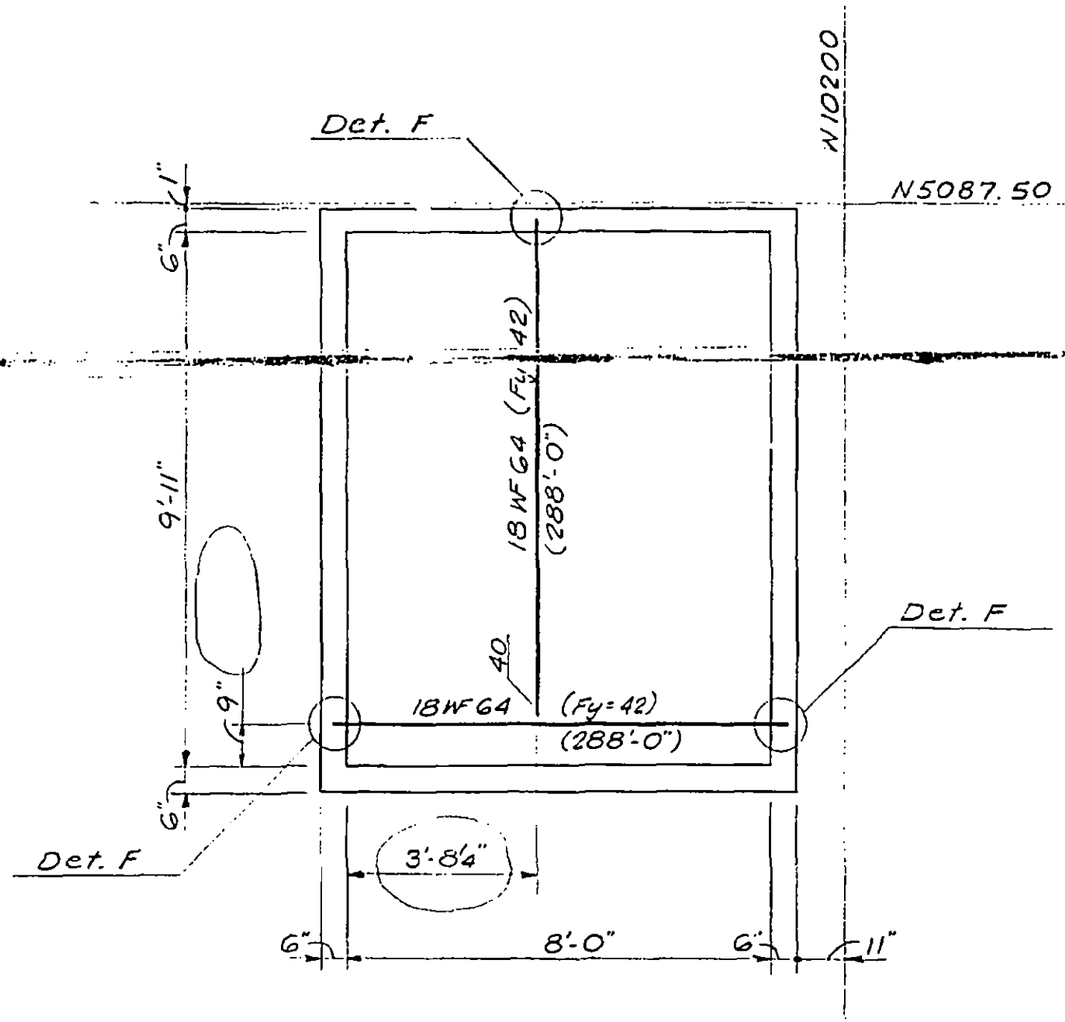

Plan

Note:
For details see 12-JK1-70F

LICENSED PROFESSIONAL ENGINEER
LESLIE E. ROBERTSON
NO. 34360
UNIVERSITY OF THE STATE OF NEW YORK

DESIGNED

DRAWN S.C.

REVIEWED E.L.

12-JK1-70C

SKILLING, HELLE, CHRISTIANSEN, ROBERTSON — Structural & Civil Engineers

PROJECT THE WORLD TRADE CENTER | TITLE ELEVATOR C-10 "BUMPER" BEAMS | DATE 5-26-69

REVISIONS

10-13-69

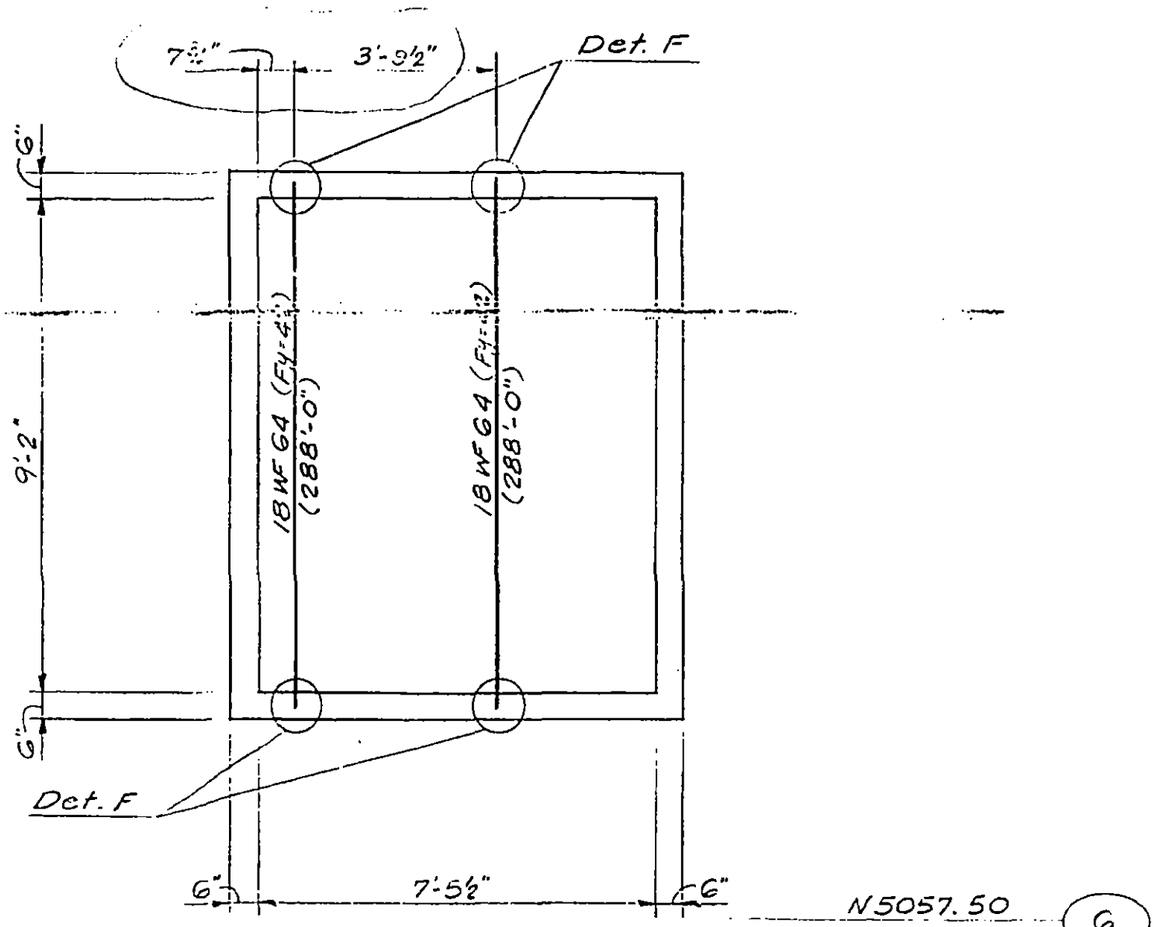

Plan

Note:
For details see 12-JK1-70F

LICENSED PROFESSIONAL ENGINEER
LESLIE E. ROBERTSON
No. 34360
UNIVERSITY OF THE STATE OF NEW YORK

DESIGNED

DRAWN
S.C.

REVIEWED
E.L.

12-JK1-70D

SKILLING, HELLE, CHRISTIANSEN, ROBERTSON — Structural & Civil Engineers

PROJECT: THE WORLD TRADE CENTER | TITLE: DETAIL OF "BUMPER" BEAM FOR ELEVATORS | DATE: 5-26-69

REVISIONS

5-26-70

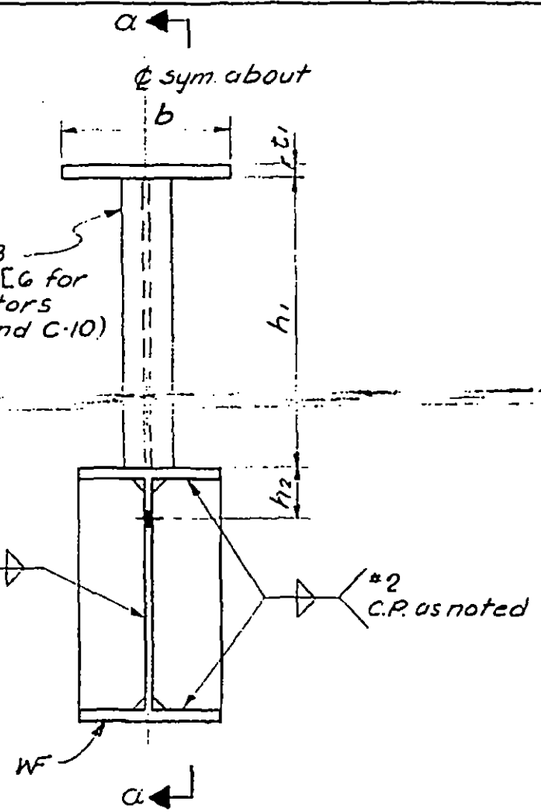

Elevation

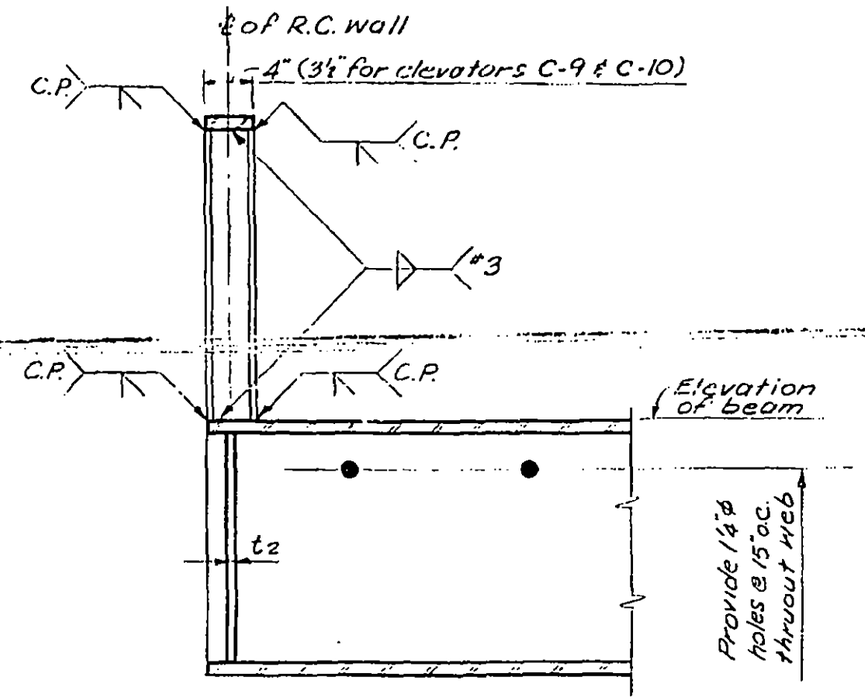

Section a-a

DETAIL No.	MEMBER SIZE	DIMENSIONS					WELD SIZE		
		t_1	t_2	b	h_1	h_2	#1	#2	#3
A	21 WF 112	2"	¾"	16"	4'-0"	2¼"	⅜	C.P.	⅜
B	21 WF 112	1"	½"	8"	2'-0"	2¼"	5/16	½	¼
C	18 WF 85	1¼"	⅝"	10"	2'-6"	2¼"	5/16	C.P.	5/16
D	21 WF 127	2"	¾"	16"	4'-0"	2¼"	⅜	C.P.	⅜
E	16 B 31					6"			
F	18 WF 64	1"	⅜"	8"	2'-6"	2¼"	⅜	C.P.	¼
G	21 B 49	1"	⅜"	8"	2'-0"	2¼"	5/16	C.P.	¼
H	18 B 40	1"	⅜"	8"	2'-0"	2¼"	5/16	C.P.	¼
J	21 WF 55	2"	½"	14"	3'-0"		5/16	C.P.	⅜
K	21 WF 62	2"	⅝"	14"	3'-0"		5/16	C.P.	⅜
L	21 WF 55	1⅜"	⅜"	10"	2'-6"		5/16	C.P.	¼
M	21 B 44					2¼"			

LICENSED PROFESSIONAL ENGINEER
LESLIE E. ROBERTSON
No 34360
UNIVERSITY OF THE STATE OF NEW YORK

DESIGNED

DRAWN
S.C.

REVIEWED
E.L.

12-JK1-70F

SKILLING, HELLE, CHRISTIANSEN, ROBERTSON — Structural & Civil Engineers

PROJECT: THE WORLD TRADE CENTER | TITLE: BEAM DETAIL - ELEVATOR PITS | DATE: 1-15-72

REVISIONS

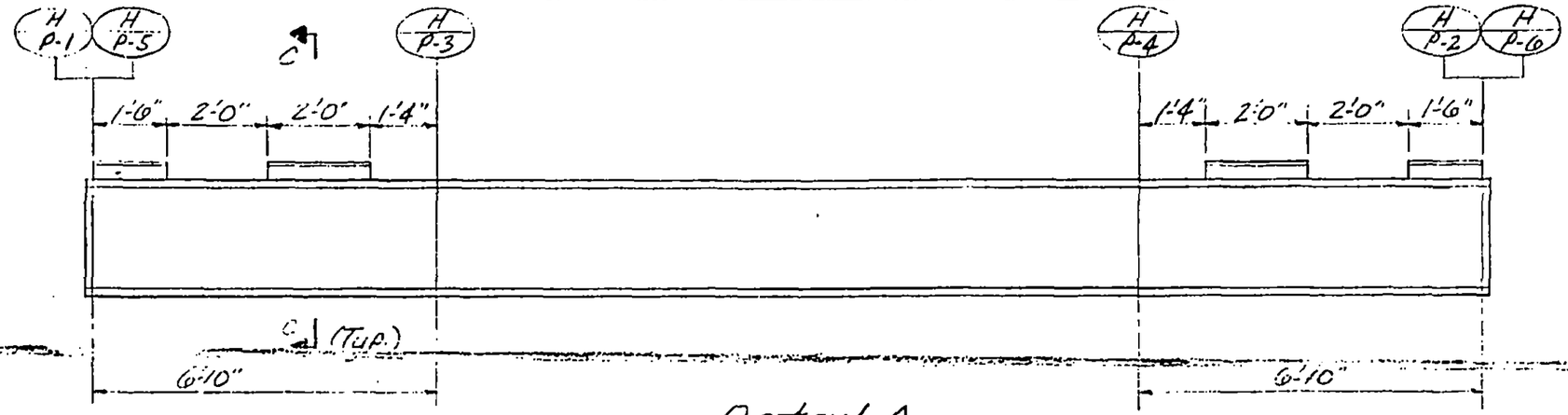

Detail A

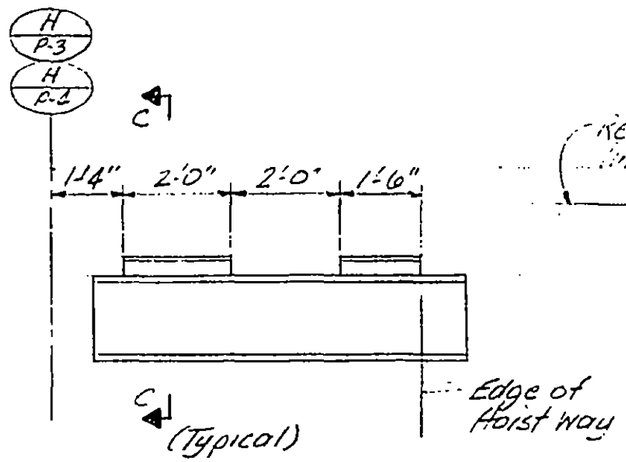

Detail B

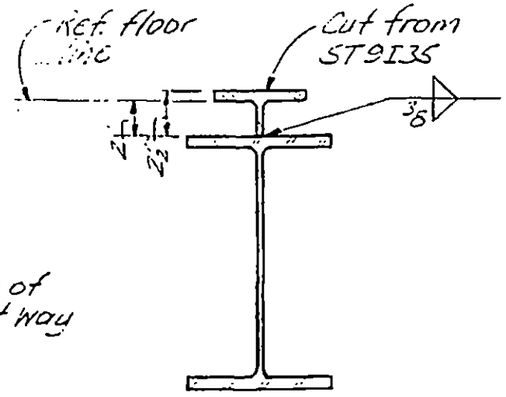

Detail C

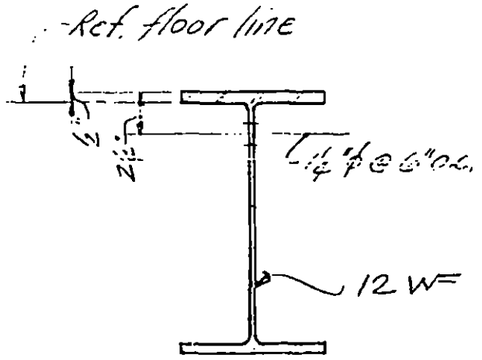

Section D-D

LICENSED PROFESSIONAL ENGINEER — LESLIE E. ROBERTSON — NO 34360 — UNIVERSITY OF THE STATE OF NEW YORK

DESIGNED

DRAWN

REVIEWED W Brown

12-JK1-70G

SKILLING, HELLE, CHRISTIANSEN, ROBERTSON — Structural & Civil Engineers

PROJECT: THE WORLD TRADE CENTER | TITLE: BEAM DETAILS - ELEVATOR PITS | DATE: 1-15-72

REVISIONS

3-10-72 Complete Rev.

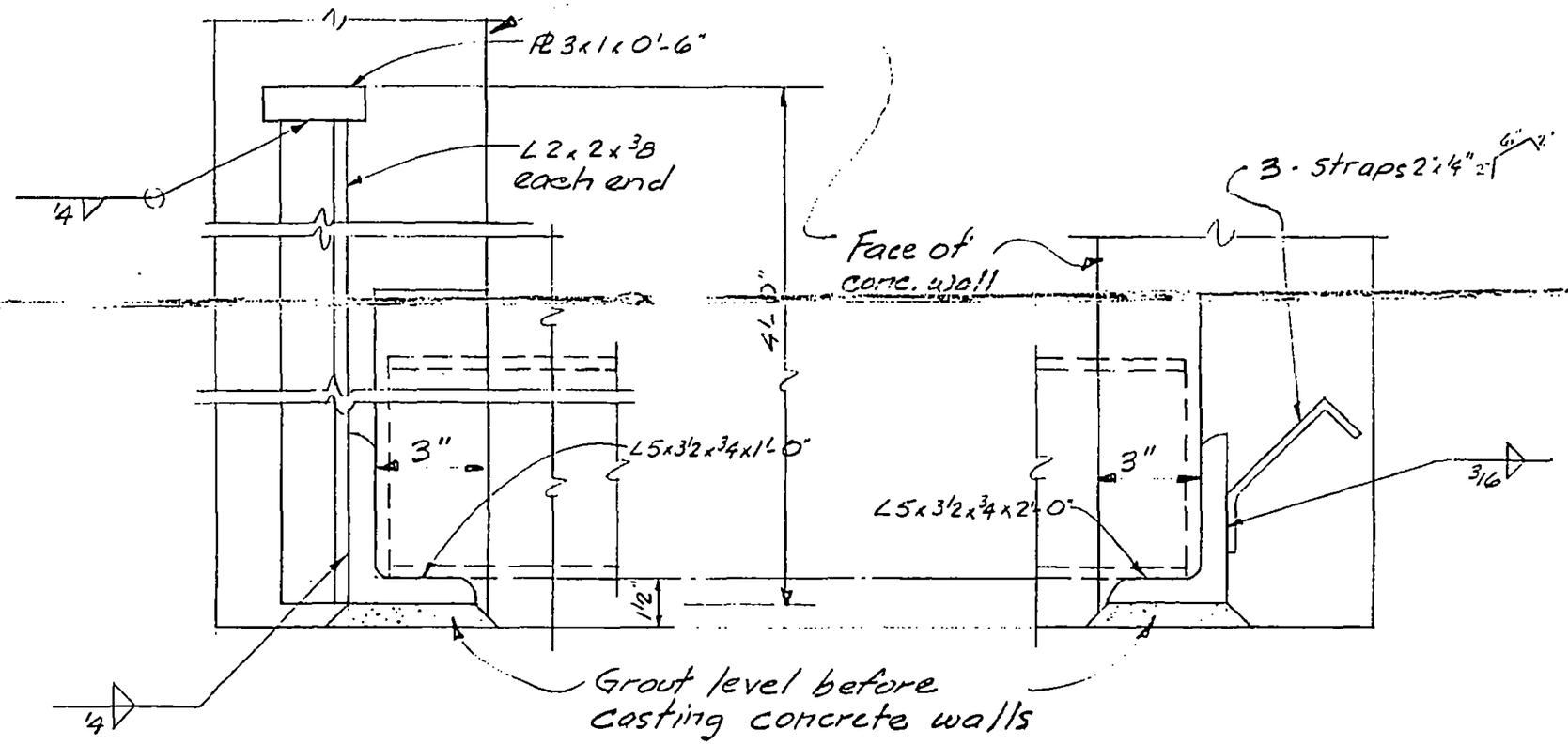

Detail E

Detail F

LICENSED PROFESSIONAL ENGINEER — LESLIE E. ROBERTSON — No 34360 — UNIVERSITY OF THE STATE OF NEW YORK

DESIGNED

DRAWN A. F.

REVIEWED LER

12-JK1-70H

SKILLING - HELLE - CHRISTIANSEN - ROBERTSON Structural & Civil Engineers

PROJECT THE WORLD TRADE CENTER | TITLE BEAM DETAIL UNDER EXIST. TEL. MANHOLE | DATE 4-5-68

REVISIONS

3-21-69

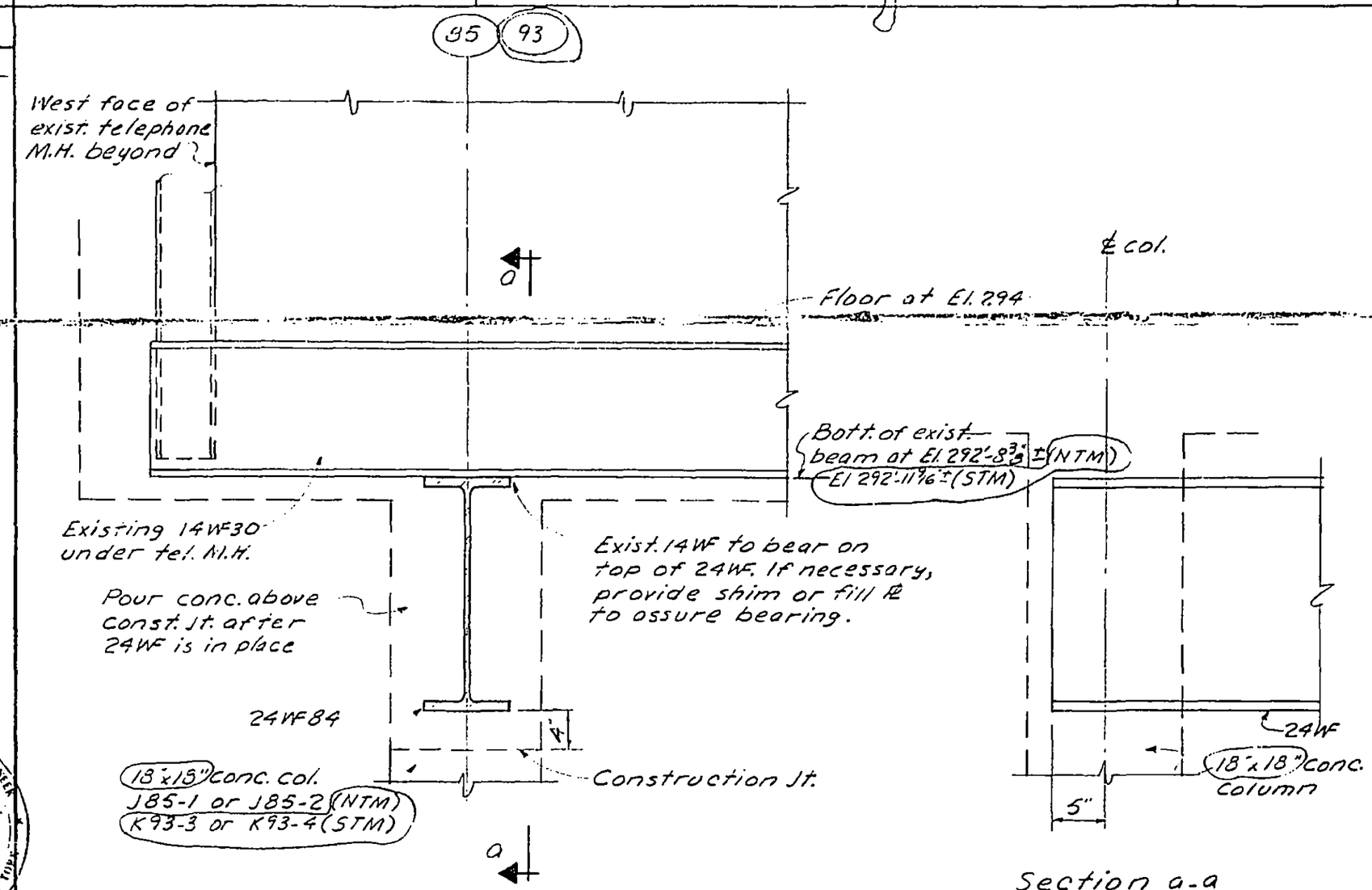

Section a-a
(Opp. hand at col. J85-1)

Notes:
1. (NTM) — North telephone manhole.
(STM) — South telephone manhole.

LICENSED PROFESSIONAL ENGINEER LESLIE E. ROBERTSON No. 34360 UNIVERSITY OF THE STATE OF NEW YORK

S.C.

REVIEWED E.L.

12-JK1-71

SKILLING - HELLE - CHRISTIANSEN - ROBERTSON Structural & Civil Engineers

PROJECT THE WORLD TRADE CENTER | TITLE BEAM DETAIL UNDER EXIST. TELEPHONE MANHOLE | DATE 4-5-68

REVISIONS

3-21-69

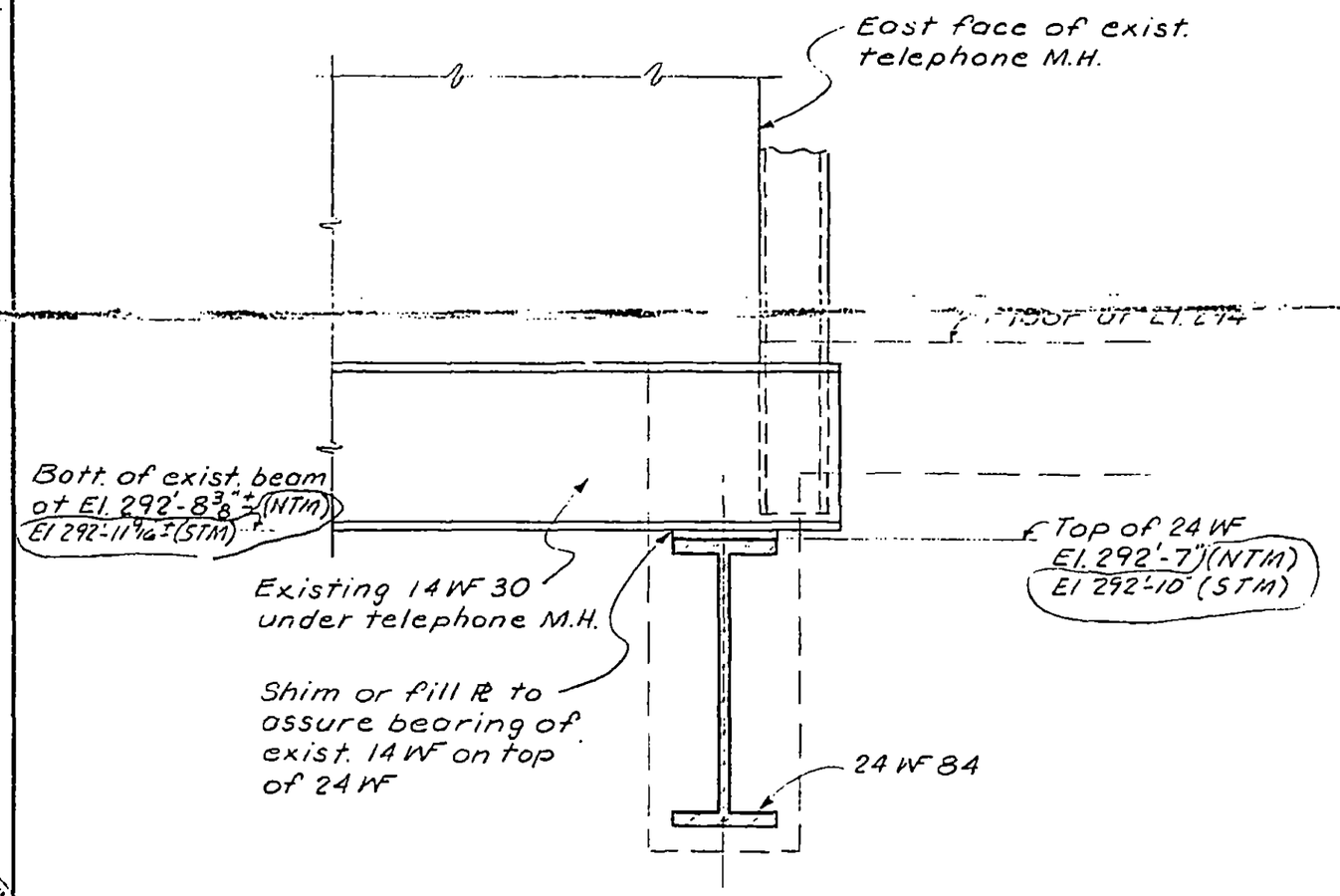

LICENSED PROFESSIONAL ENGINEER
LESLIE E. ROBERTSON
No. 34360
UNIVERSITY OF THE STATE OF NEW YORK

Notes:
1. (NTM) — North telephone mannole.
(STM) — South telephone mannole.

S.C

REVIEWED
E.L.

12-JK1-72

SKILLING - HELLE - CHRISTIANSEN - ROBERTSON Structural & Civil Engineers

PROJECT THE WORLD TRADE CENTER | TITLE DETAIL OF POSTS | DATE 4-5-68

REVISIONS

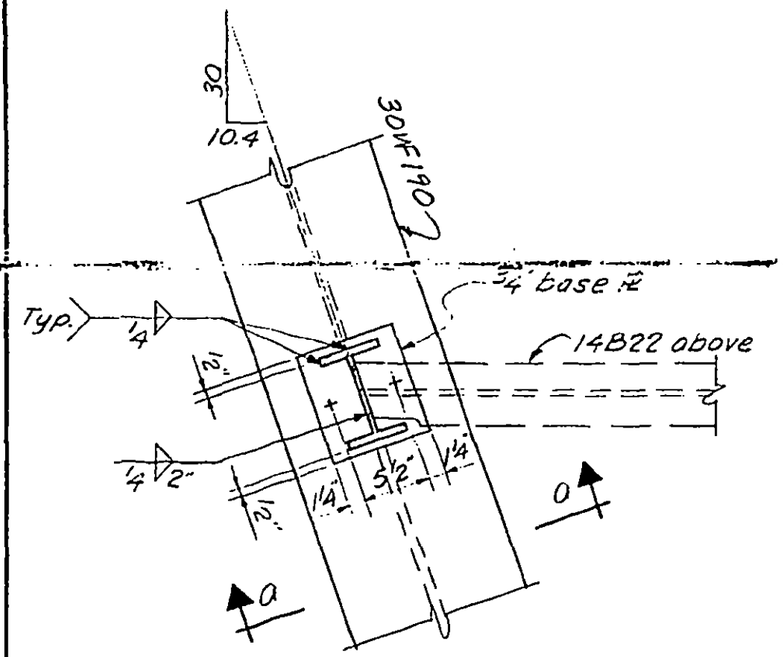

Plan

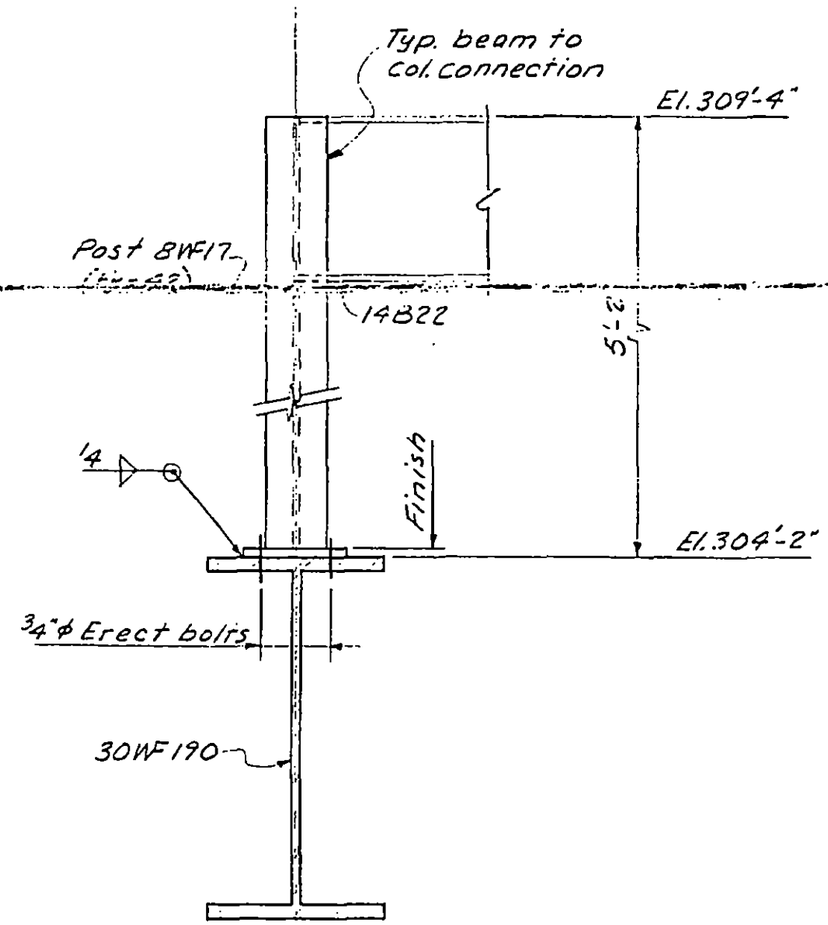

Section a-a

LICENSED PROFESSIONAL ENGINEER
LESLIE E. ROBERTSON
No. 34360
UNIVERSITY OF THE STATE OF NEW YORK

12-JK1-73

SKILLING - HELLE - CHRISTIANSEN - ROBERTSON Structural & Civil Engineers

PROJECT THE WORLD TRADE CENTER | TITLE DETAIL OF POSTS | DATE 4-5-68

REVISIONS
6-7-68
2-4-69
3-21-69

Detail No.	Size of Post	Weld A	Weld B
1	8WF17	1/4	1/4
2	10WF33	1/4	1/4
3	10WF49	5/16	1/4
4	10WF33	1/2	1/4

Detail No.	Size of Post	Weld A	Weld B

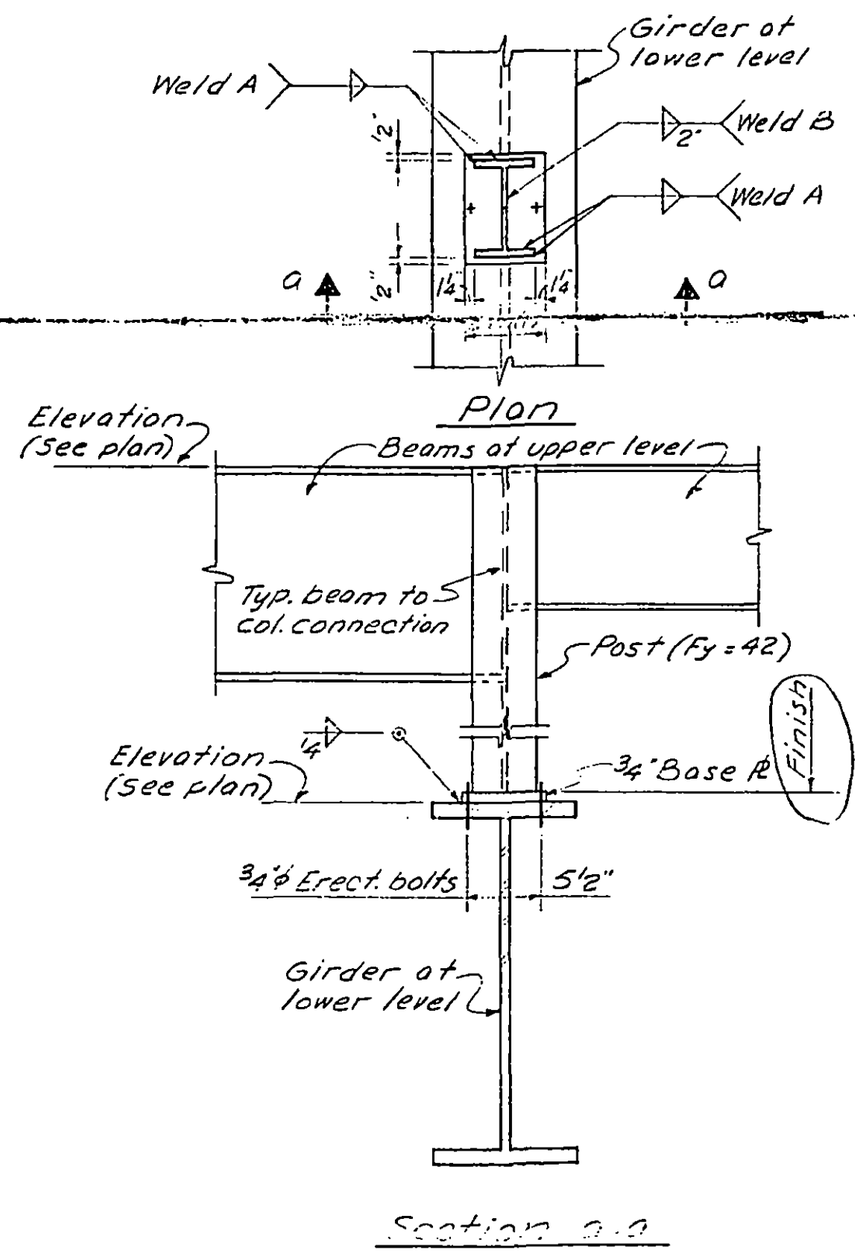

LICENSED PROFESSIONAL ENGINEER
LESLIE E. ROBERTSON
No. 34360
UNIVERSITY OF THE STATE OF NEW YORK

DRAWN
S.C.

REVIEWED
E.L.

12-JK1-74

SKILLING - HELLE - CHRISTIANSEN - ROBERTSON Structural & Civil Engineers

PROJECT THE WORLD TRADE CENTER | TITLE DETAIL OF HANGERS | DATE 4-5-68

REVISIONS
6-7-68
7-19-68
9-4-68
11-5-68
1-8-69
3-21-69
7-19-72

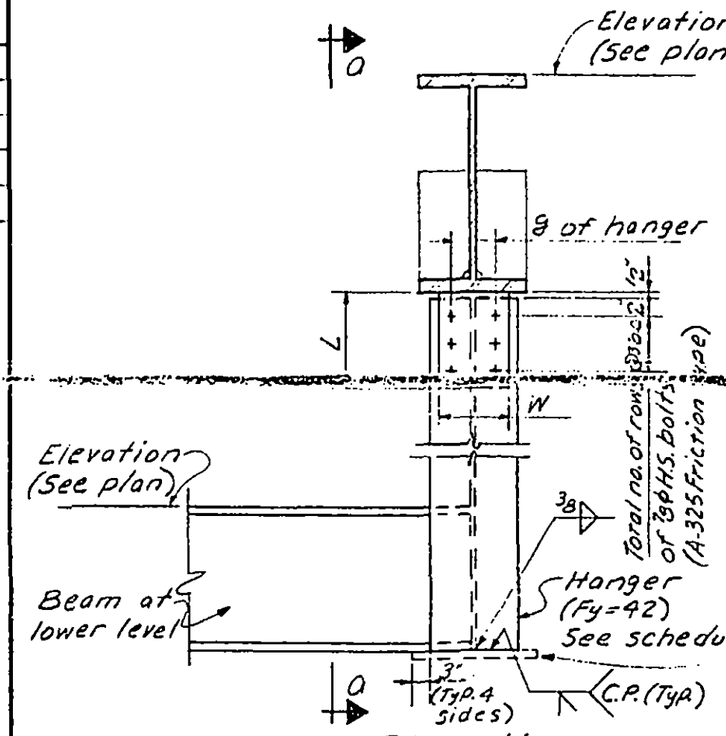

Elevation

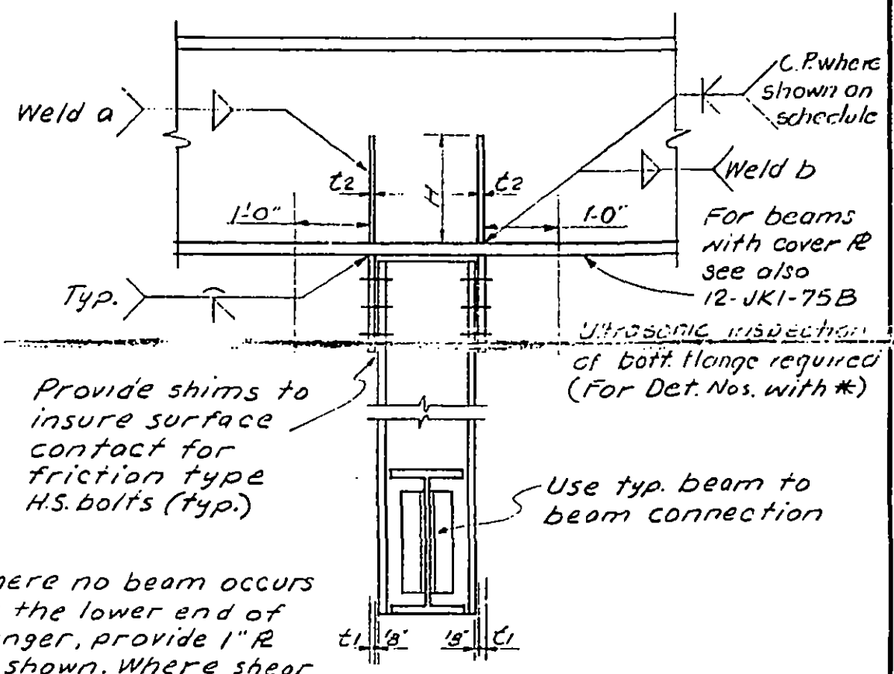

Where no beam occurs at the lower end of hanger, provide 1" R as shown. Where shear head occurs see detail on 10-JK2-35

Section a-a

Detail No.	Size of Hanger	Plates t1	t2	L	W	H	No. of Rows of Bolts	Weld a	Weld b
1	12WF50	5/8	3/8	7"	8 1/2"	10"	2	1/4	1/4
2	12WF50	5/8	3/8	10"	8 1/2"	12"	3	1/4	5/16
3*	12WF36 (See col. sch.)	3/4	3/4	13"	6"	12"	4	3/8	C.P.
4*	12WF36 (See Col. sch.)	3/4	3/4	16"	6"	14	5	3/8	C.P.
5	10WF45	5/8	1/2	16"	8 1/2"	12"	5	5/16	C.P.
6*	14WF142 (See Col. sch.)	3/4	3/4	13"	8 1/2"	12"	4	3/8	C.P.
7	14WF38	5/8	1/2	13"	6 1/2"	10"	4	5/16	C.P.
5	14WF43	5/8	1/2	10"	8'2"	10"	3	5/16	C.P
9	12WF53	5/8	3/8	7"	8 1/2"	10"	2	1/4	1/4

Detail No.	Size of Hanger	Plates t1	t2	L	W	H	No. of Rows of Bolts	Weld a	Weld b

LICENSED PROFESSIONAL ENGINEER LESLIE E. ROBERTSON No. 34360 UNIVERSITY OF THE STATE OF NEW YORK

12-24-68
DRAWN S.C.
REVIEWED E.L.

12-JK1-75

SKILLING, HELLE, CHRISTIANSEN, ROBERTSON — Structural & Civil Engineers

PROJECT THE WORLD TRADE CENTER | TITLE DETAIL AT BOTTOM OF HANGER | DATE 11-5-68

REVISIONS

4-18-69

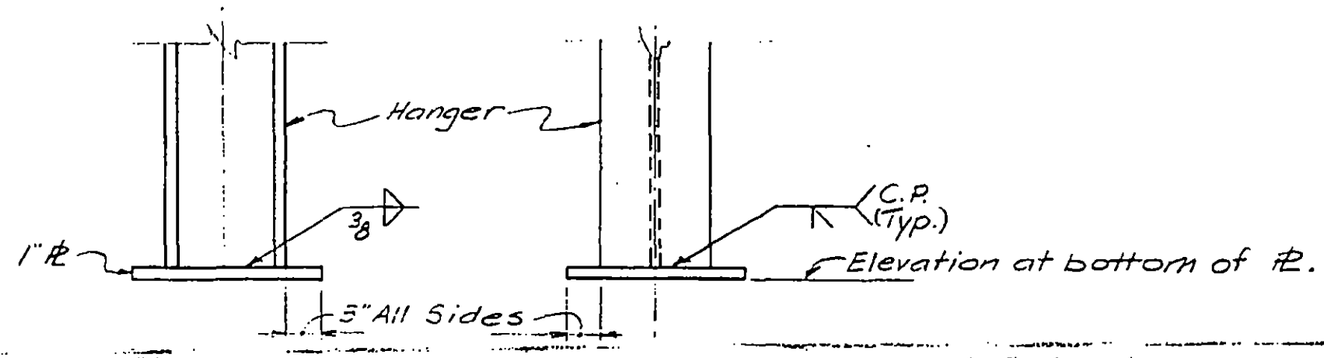

Detail No.	Elevation of Bottom PL
1	El. 272'-7"
2	El. 271'-8"
3	El. 271'-8"
4	El. 271'-8"
5	El. 273'-3"
6	El. 277'-5"
7	El. 277'-5"
8	El. 278'-6"
9	El. 277'-5"
10	El. 267'-11"

Detail No.	Elevation of Bottom PL

Notes:
1. All PLs to have Fy = 36 ksi.
2. All welds to be E70xx.

LICENSED PROFESSIONAL ENGINEER — LESLIE E. ROBERTSON — No. 34500 — STATE OF NEW YORK

DESIGNED

DRAWN S.C.

REVIEWED E.L.

12-JK1-75A

SKILLING, HELLE, CHRISTIANSEN, ROBERTSON Structural & Civil Engineers

PROJECT THE WORLD TRADE CENTER | TITLE DETAIL OF HANGER UNDER BEAMS WITH COVER PL | DATE 11-5-68

REVISIONS

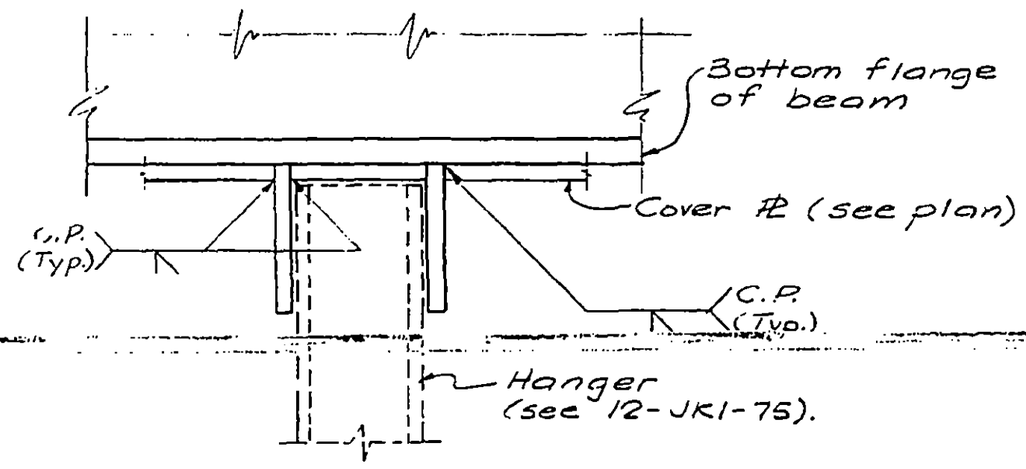

NOTES:

1. All other details, see 12-JK1-75.
2. All welds to be E70XX.

DESIGNED

DRAWN

REVIEWED

12-JK1-75B

SKILLING, HELLE, CHRISTIANSEN, ROBERTSON — Structural & Civil Engineers

PROJECT: THE WORLD TRADE CENTER | TITLE: DETAIL OF HANGER | DATE: 3-21-69

REVISIONS

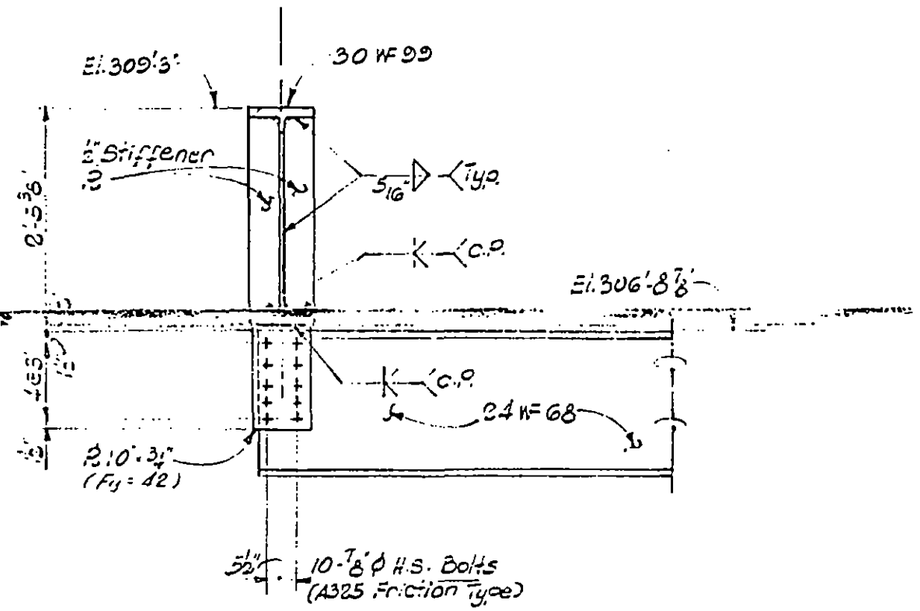

LICENSED PROFESSIONAL ENGINEER — LESLIE E. ROBERTSON — No. 34360 — UNIVERSITY OF THE STATE OF NEW YORK

DESIGNED

DRAWN: S.T.M.

REVIEWED: E.L.

12-JK1-75C

SKILLING · HELLE - CHRISTIANSEN - ROBERTSON Structural & Civil Engineers

PROJECT THE WORLD TRADE CENTER | TITLE BEAM CONNECTION DETAIL | DATE 4-5-68

REVISIONS

7-19-68

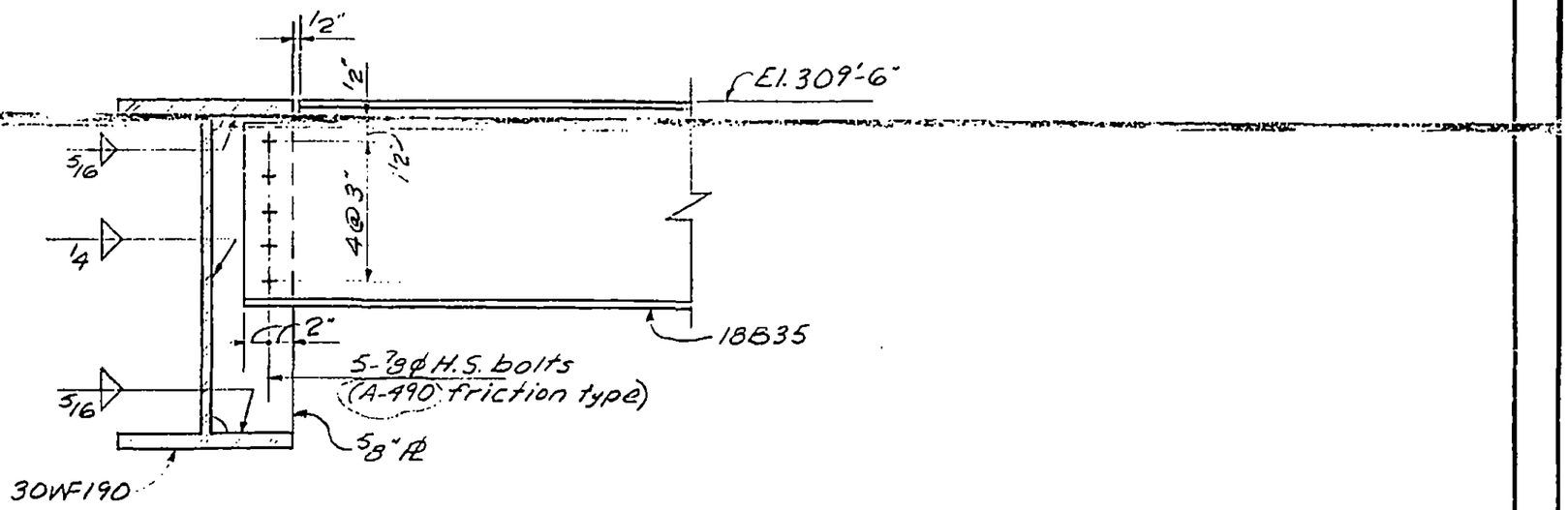

12-JK1-76

SKILLING - HELLE - CHRISTIANSEN - ROBERTSON Structural & Civil Engineers

PROJECT THE WORLD TRADE CENTER | TITLE DETAIL OF POSTS | DATE 4-5-68

REVISIONS

7-19-68

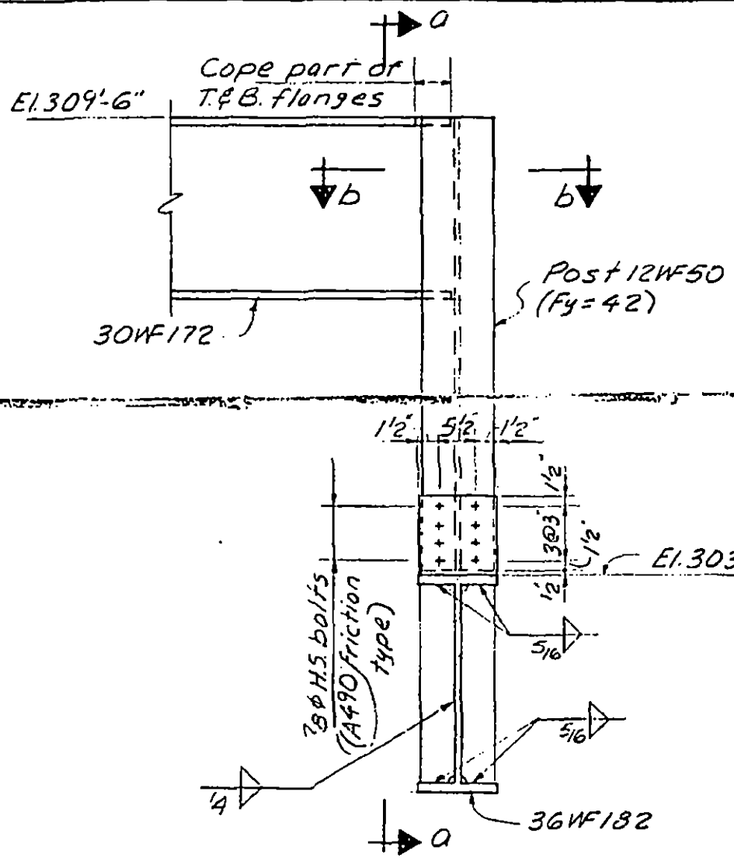

Elevation

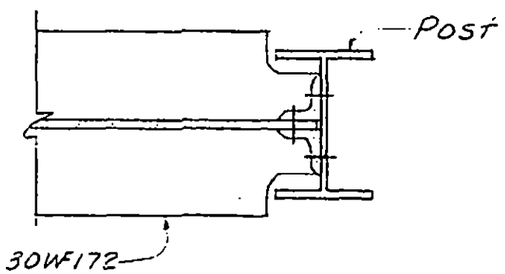

Section b-b

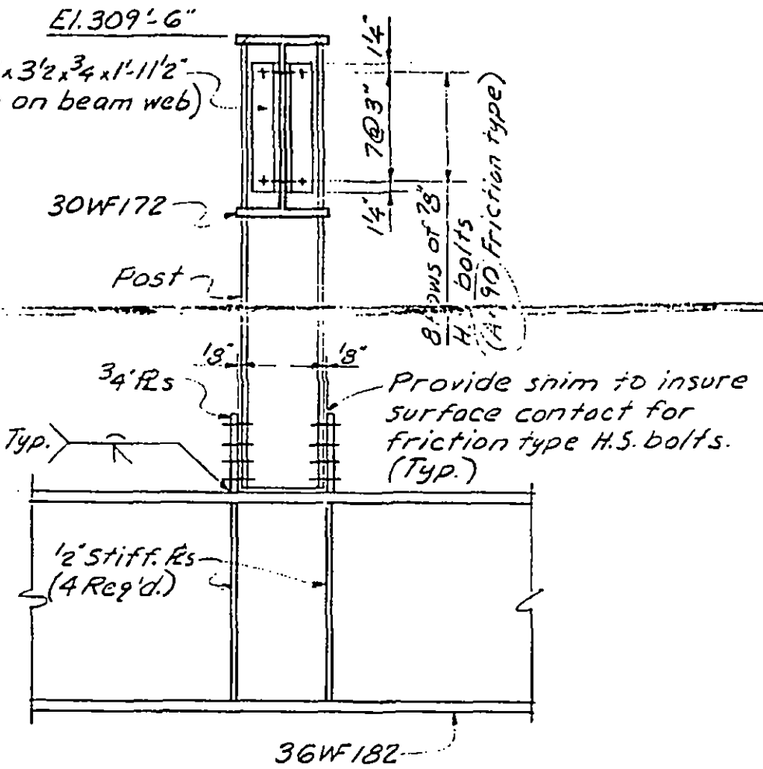

Section a-a

LICENSED PROFESSIONAL ENGINEER
LESLIE E. ROBERTSON
No. 34360
THE STATE OF NEW YORK

12-JK1-77

SKILLING - HELLE - CHRISTIANSEN - ROBERTSON Structural & Civil Engineers

PROJECT THE WORLD TRADE CENTER | TITLE FLOOR BEAM DIAPHRAGM DETAILS | DATE 6-7-68

REVISIONS

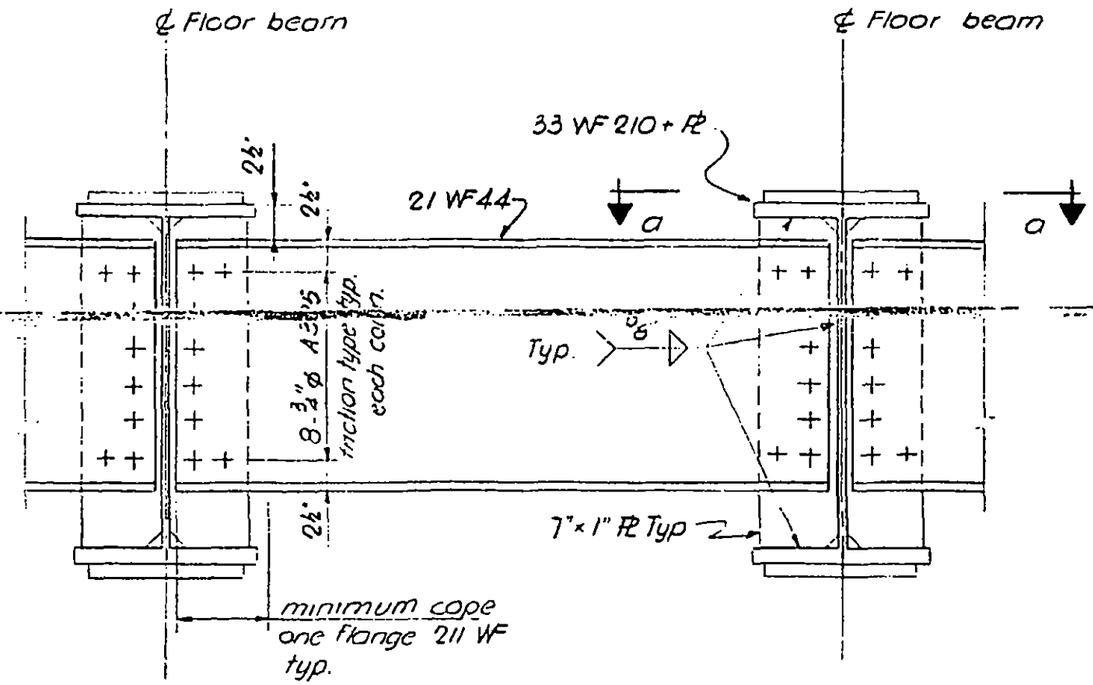

Elevation - typical Diaphragm

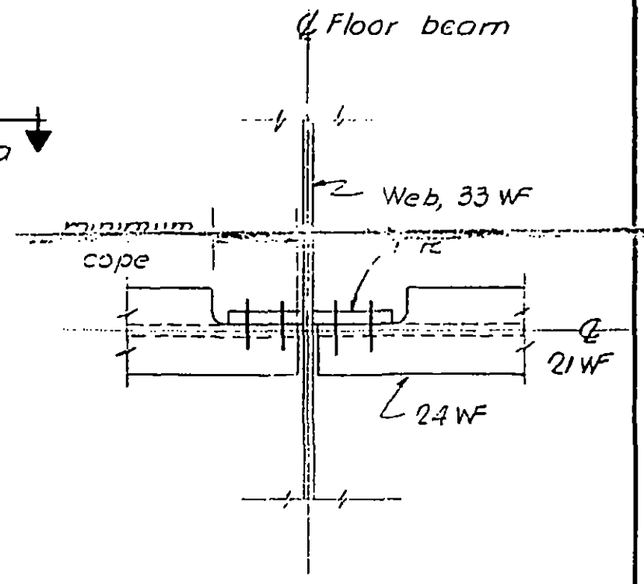

Section a-a

Ref. dwgs: S1-76, S1-77

12-JK1-78

SKILLING - HELLE - CHRISTIANSEN - ROBERTSON Structural & Civil Engineers

PROJECT THE WORLD TRADE CENTER | TITLE BEAM CONNECTION DETAIL | DATE 6-7-68

REVISIONS

Notes:
1. All welds to be E 70 xx.

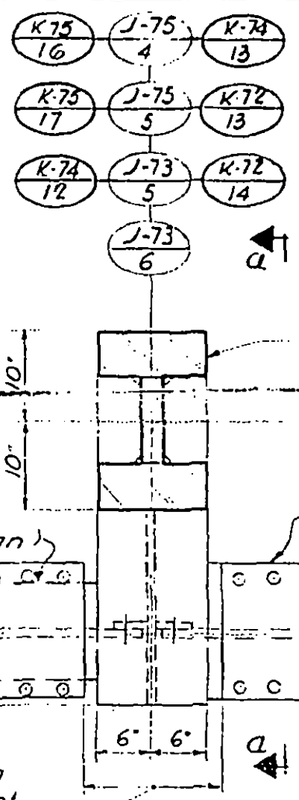

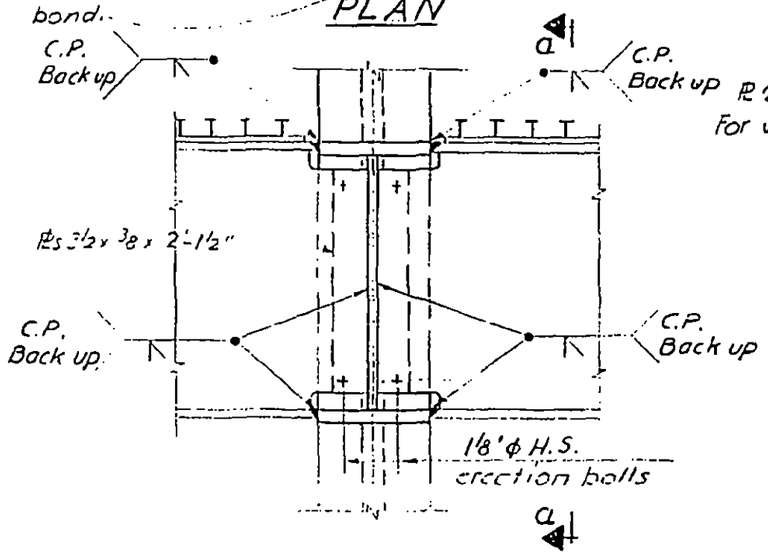

Section b-b

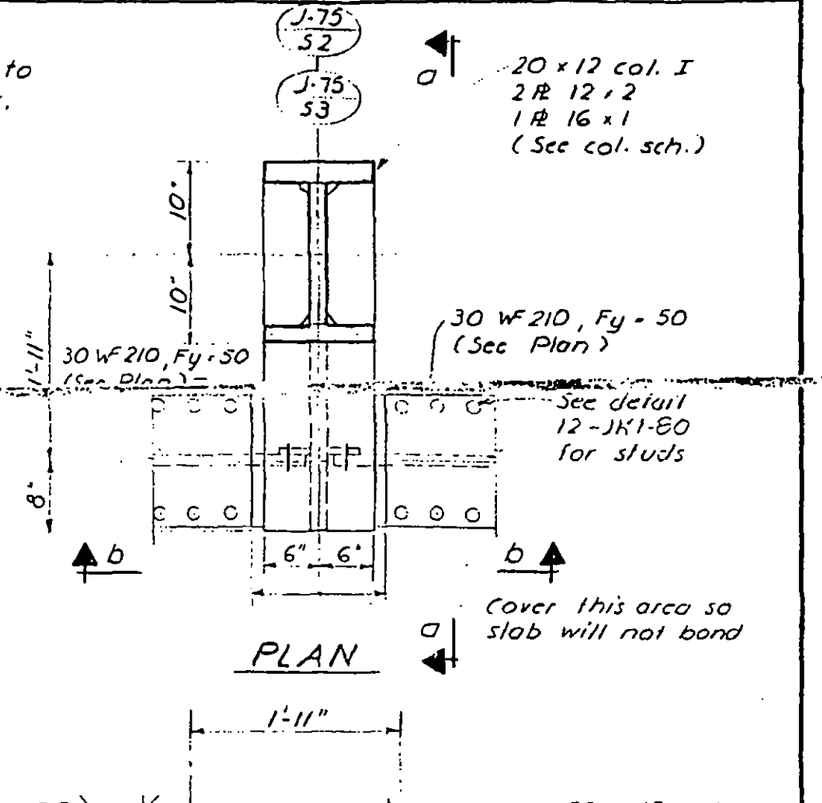

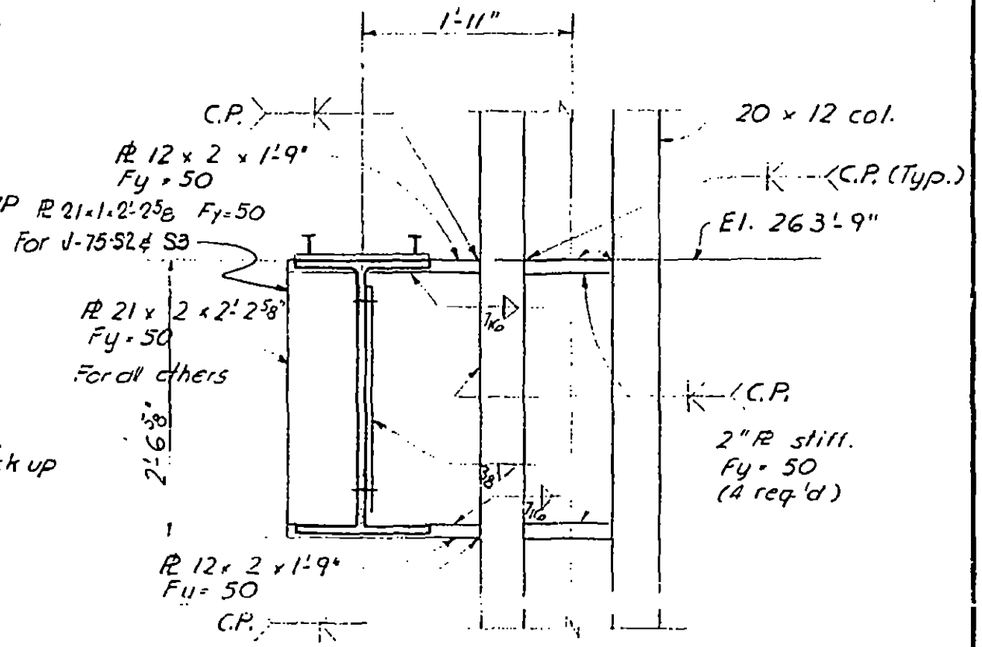

Section a-a

12-JK1-79

LICENSED PROFESSIONAL ENGINEER
LESLIE E. ROBERTSON
No. 34360
UNIVERSITY OF THE STATE OF NEW YORK

SKILLING - HELLE - CHRISTIANSEN - ROBERTSON Structural & Civil Engineers

PROJECT THE WORLD TRADE CENTER | TITLE BEAM CONNECTION DETAILS | DATE 6-7-68

REVISIONS
7-19-68
9-4-68

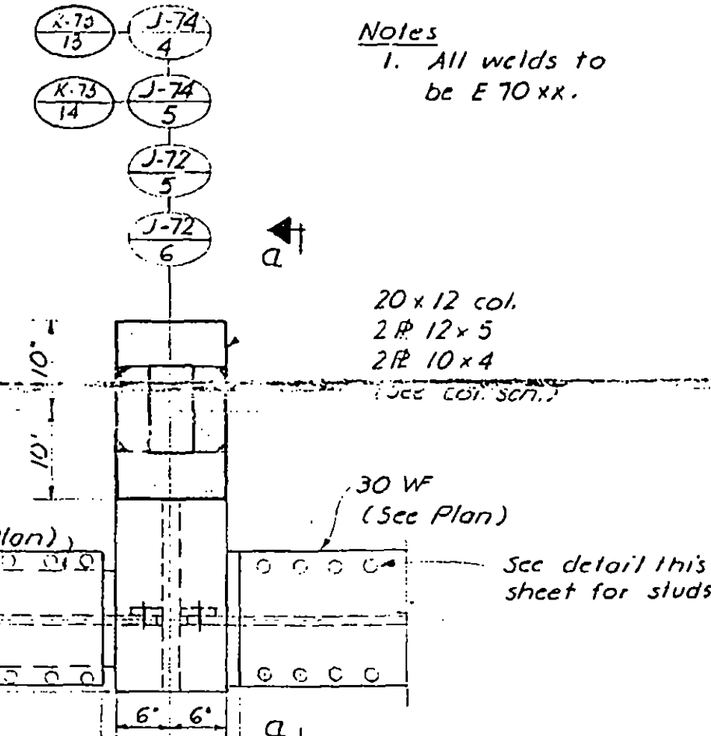

PLAN

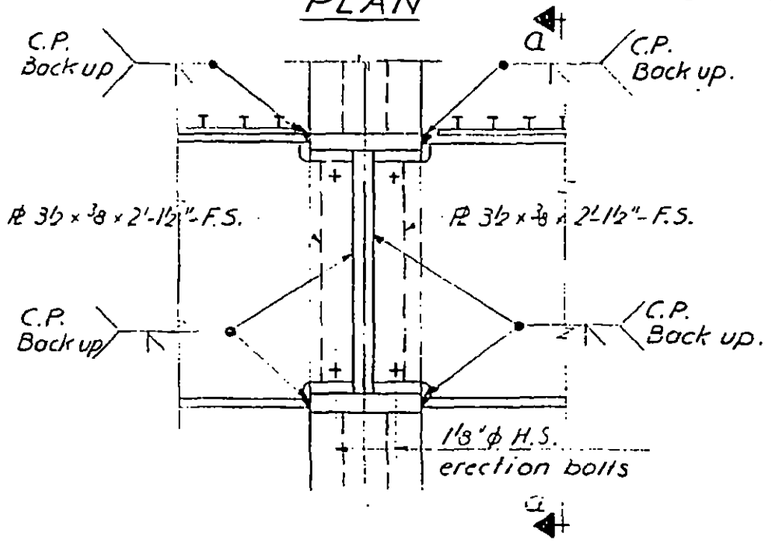

ELEVATION

Notes

1. All welds to be E 70 XX.

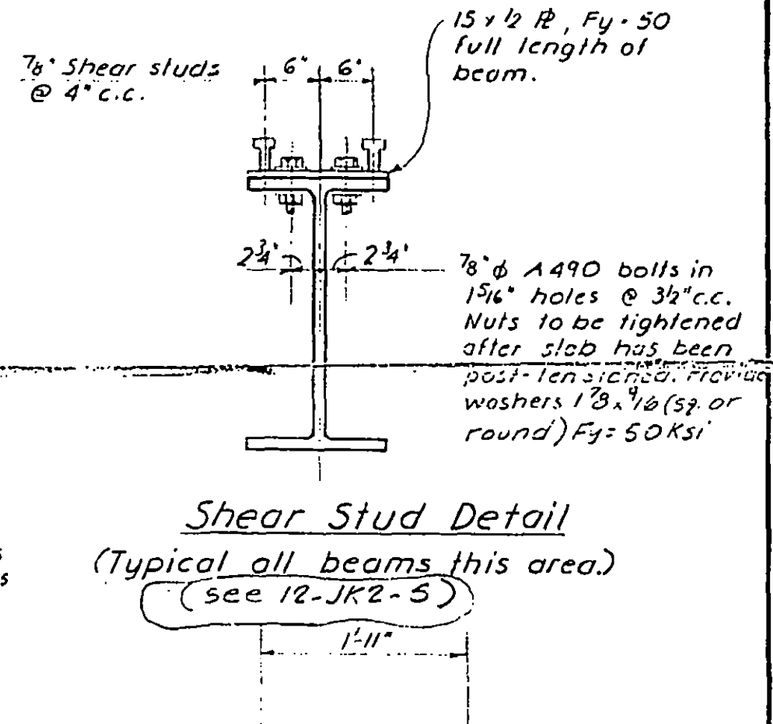

Shear Stud Detail

(Typical all beams this area.)

(see 12-JK2-5)

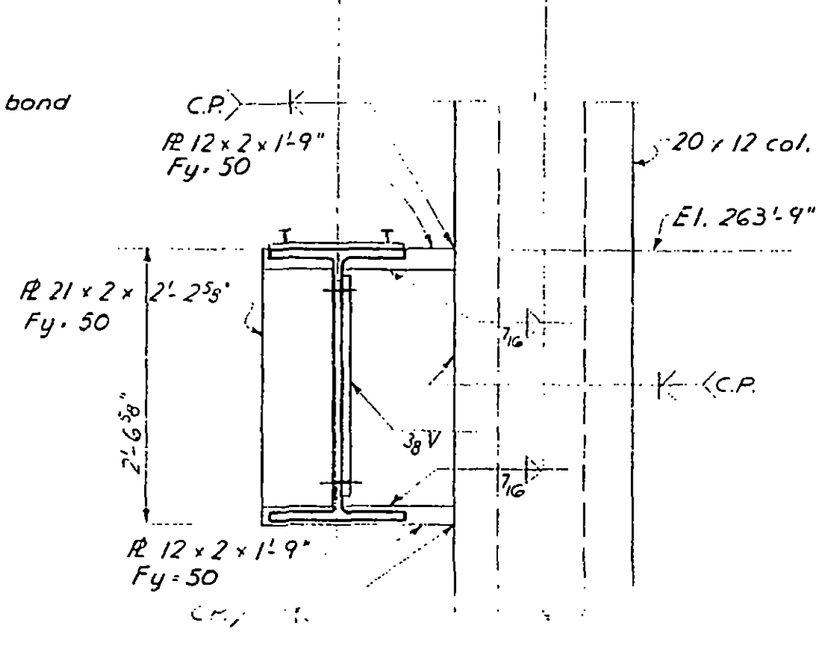

Section a-a

12-JK1-80

LICENSED PROFESSIONAL ENGINEER LESLIE E. ROBERTSON NO. 34360 COMMONWEALTH OF THE STATE OF NEW YORK

SKILLING - HELLE - CHRISTIANSEN - ROBERTSON Structural & Civil Engineers

PROJECT THE WORLD TRADE CENTER | TITLE BEAM CONNECTION DETAILS | DATE 6-11-68

REVISIONS

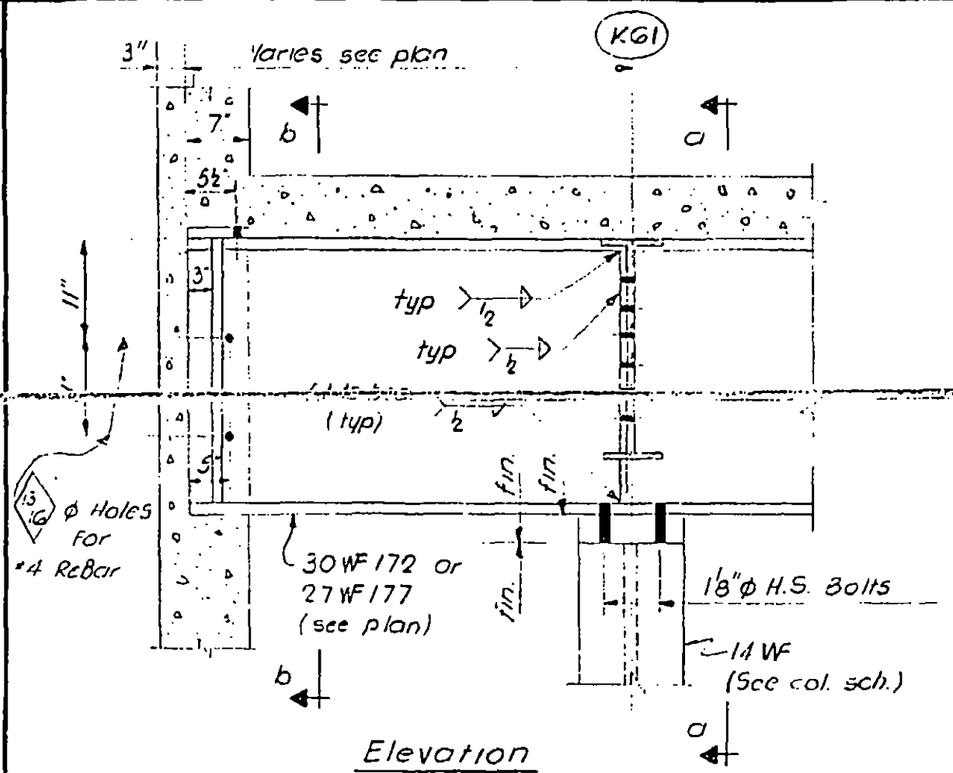

Elevation

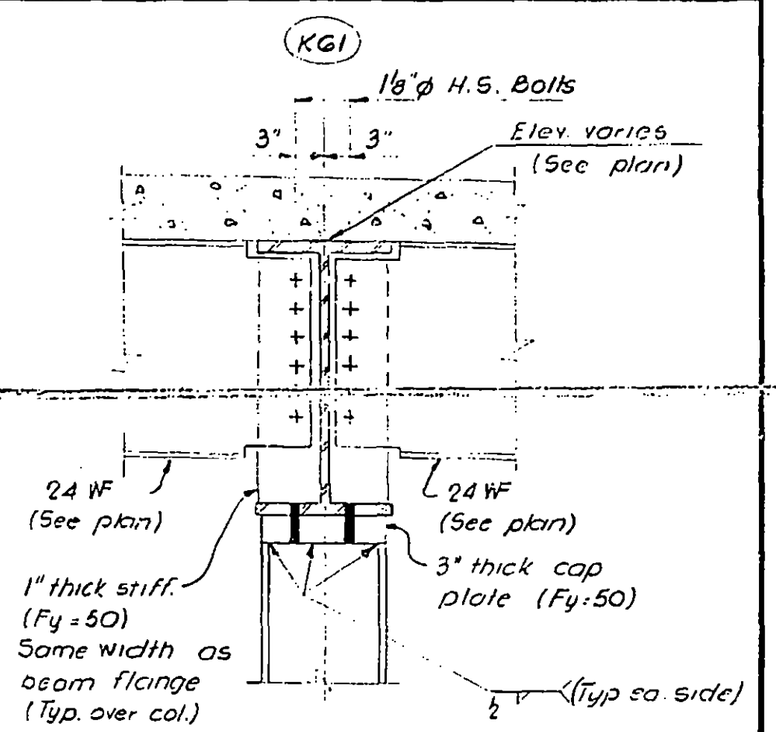

Section a-a

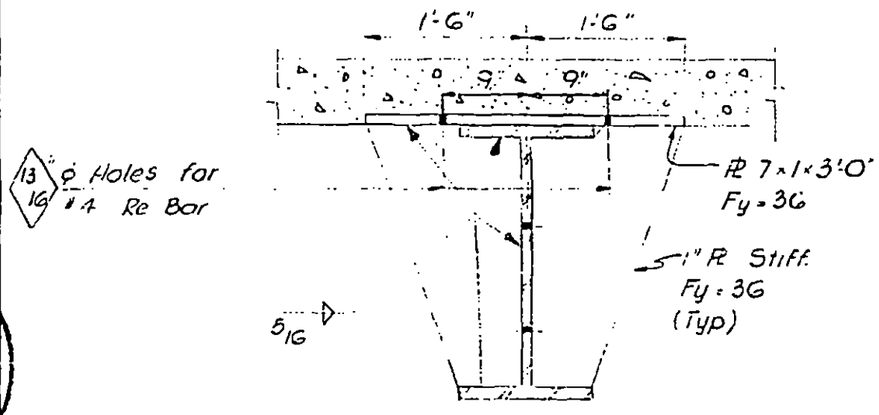

Section b-b

Notes:

1. All welds to be E 70 xx.
2. All bolts to be A325 friction type, unless noted.

LICENSED PROFESSIONAL ENGINEER LESLIE E. ROBERTSON No. 34360 UNIVERSITY OF THE STATE OF NEW YORK

12-JK1-81

SKILLING - HELLE - CHRISTIANSEN - ROBERTSON Structural & Civil Engineers

PROJECT THE WORLD TRADE CENTER | TITLE BEAM CONNECTION DETAIL | DATE 6-28-68

REVISIONS

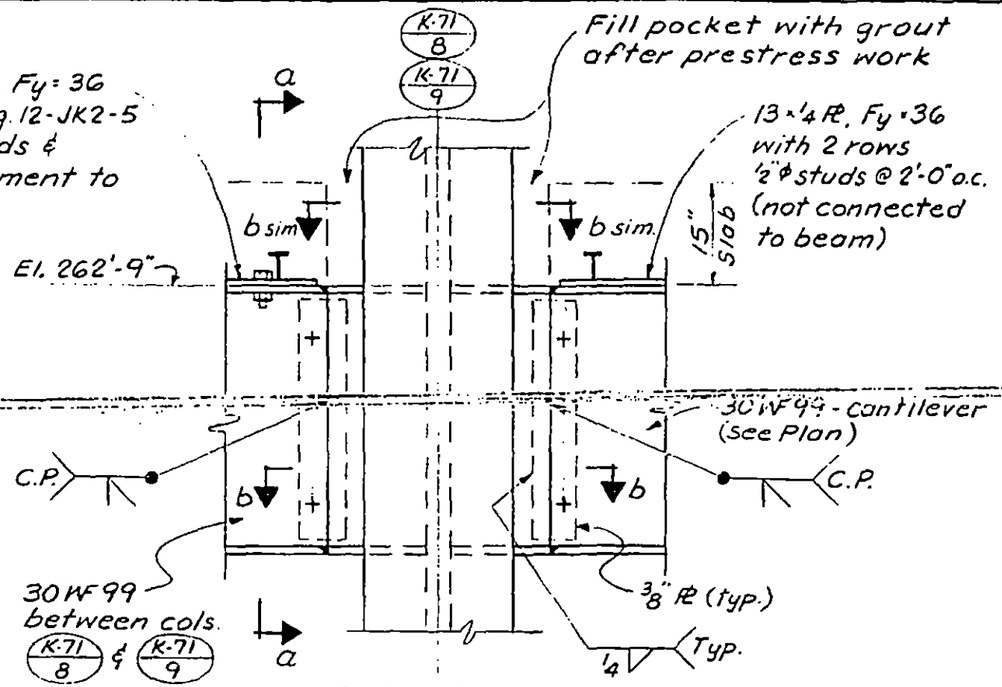

ELEVATION

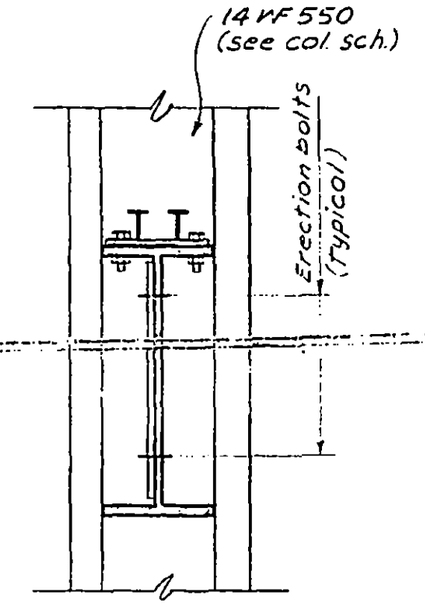

Section a-a

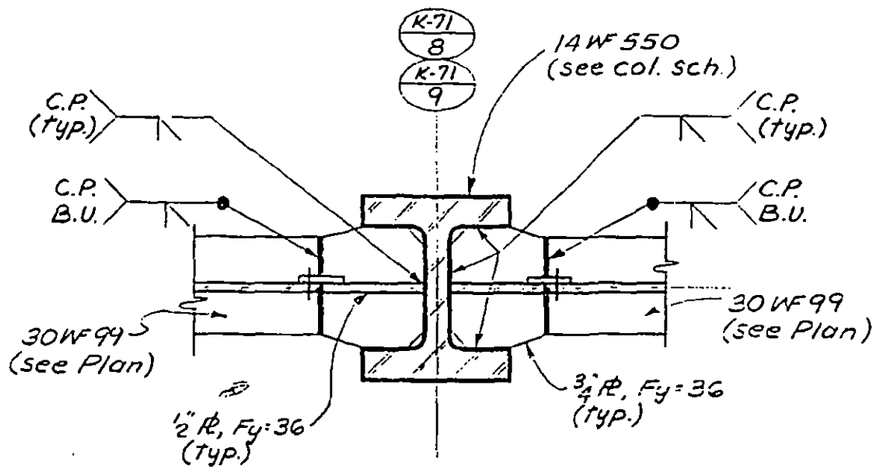

Section b-b

Note:
1. All welds to be E70xx.
2. All bolts to be A325 friction type.

LICENSED PROFESSIONAL ENGINEER
LESLIE E. ROBERTSON
No. 34360
UNIVERSITY OF THE STATE OF NEW YORK

12-JK1-82

SKILLING, HELLE, CHRISTIANSEN, ROBERTSON — Structural & Civil Engineers

PROJECT THE WORLD TRADE CENTER | TITLE DETAIL OF HANGER | DATE 8-15-68

REVISIONS

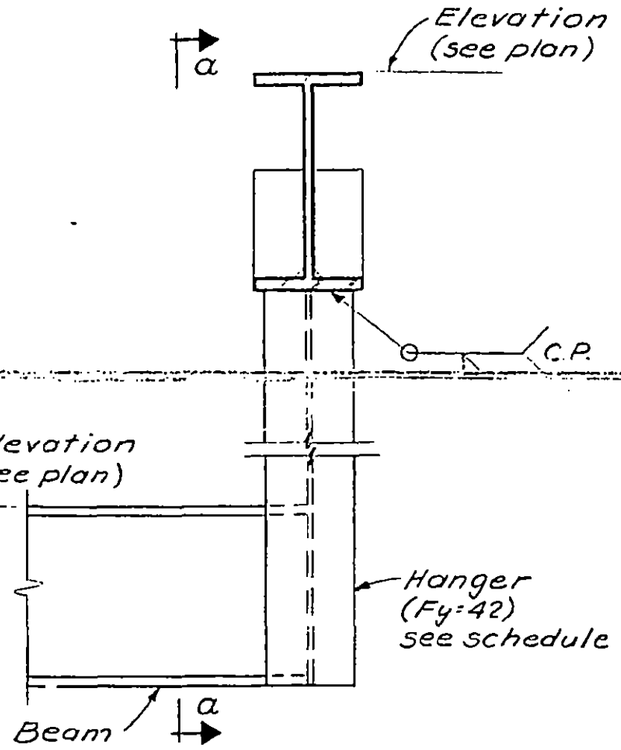

ELEVATION

Section a-a

Detail No.	Size of Hanger	Plates t	Plates H	Weld a	Weld b
1	14WF43	1/2	12"	1/4	C.P.

Detail No.	Size of Hanger	Plates t	Plates H	Weld a	Weld b

LESLIE E. ROBERTSON — PROFESSIONAL ENGINEER — No. 34360 — UNIVERSITY OF THE STATE OF NEW YORK

DESIGNED

DRAWN

REVIEWED

12-JK1-83

SKILLING, HELLE, CHRISTIANSEN, ROBERTSON — Structural & Civil Engineers

PROJECT THE WORLD TRADE CENTER | TITLE BEAM CONNECTION DETAILS | DATE 3-21-69

REVISIONS

5-29-69

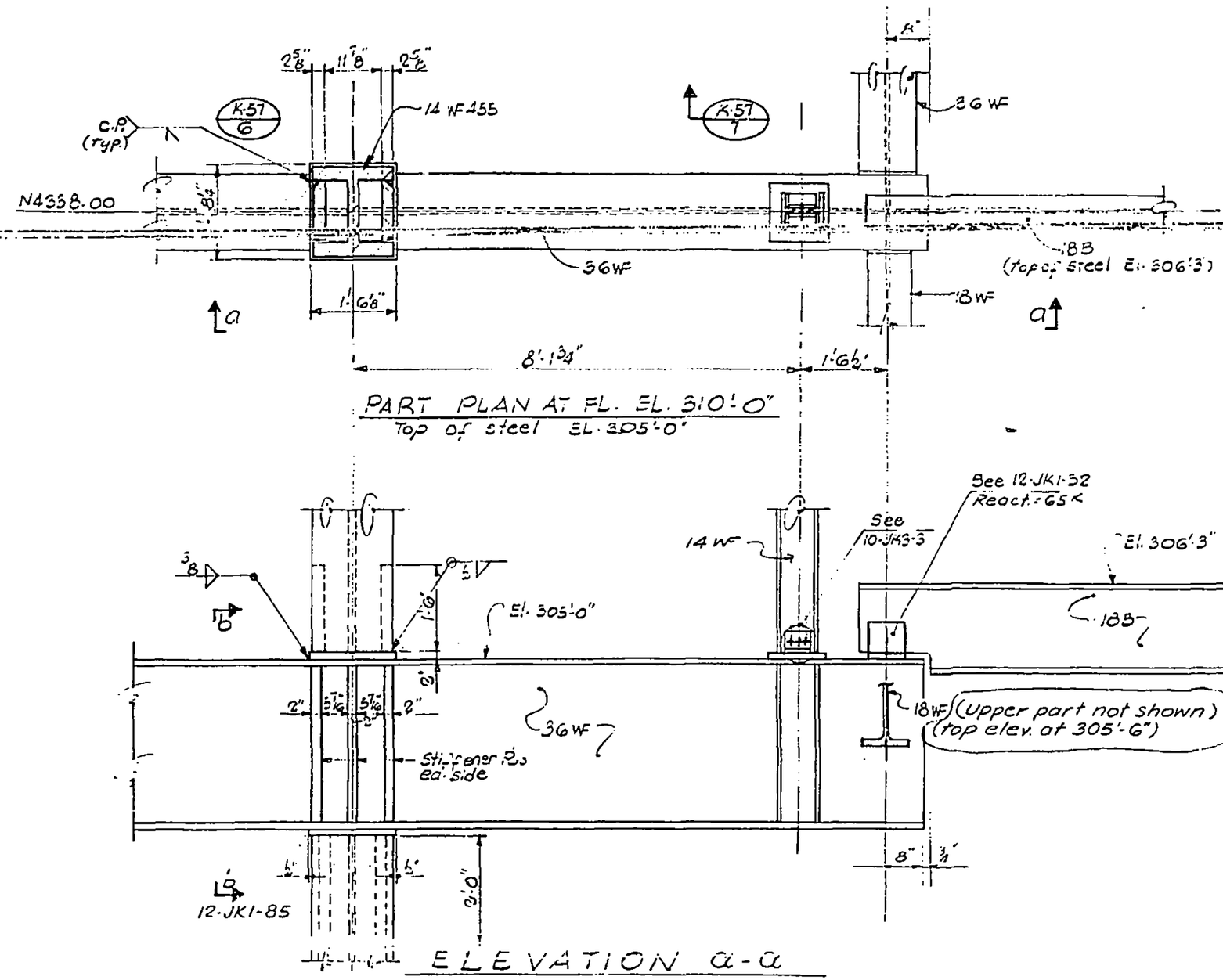

LICENSED PROFESSIONAL ENGINEER
LESLIE E. ROBERTSON
No. 34360
UNIVERSITY OF THE STATE OF NEW YORK

DESIGNED

DRAWN S.T.M.

REVIEWED E.L.

12-JK1-84

SKILLING, HELLE, CHRISTIANSEN, ROBERTSON — Structural & Civil Engineers

PROJECT THE WORLD TRADE CENTER | TITLE BEAM CONNECTION DETAILS | DATE 3-21-69

REVISIONS

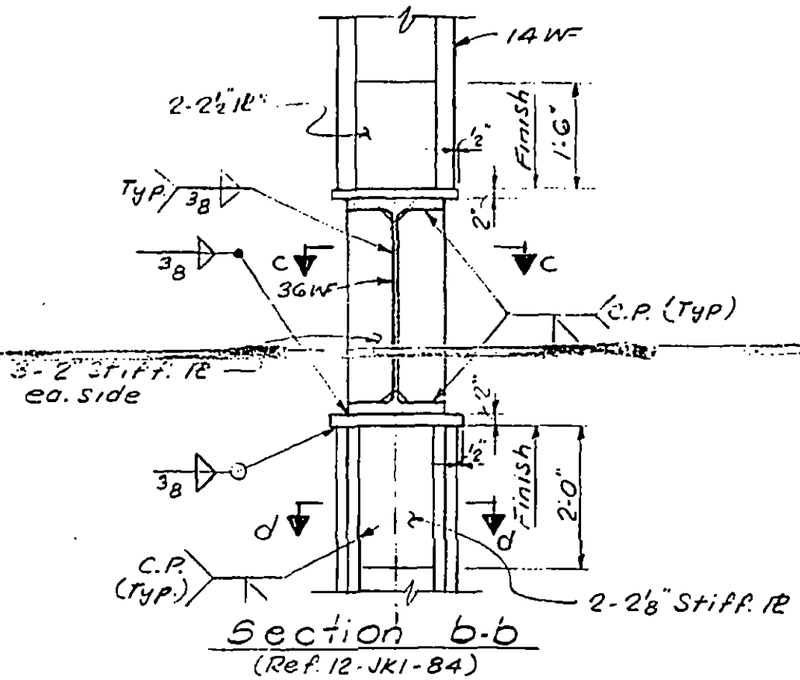

Section b-b
(Ref. 12-JK1-84)

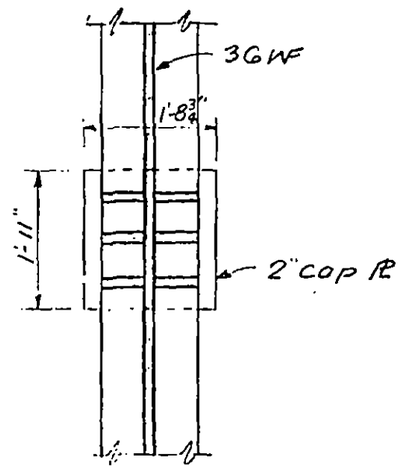

Section c-c

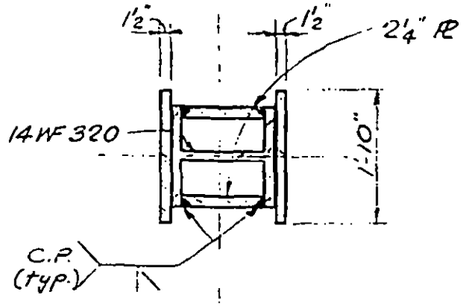

Section d-d

LICENSED PROFESSIONAL ENGINEER
LESLIE E. ROBERTSON
No. 34360
UNIVERSITY OF THE STATE OF NEW YORK

DESIGNED

DRAWN S.T.M.

REVIEWED E.L.

12-JK1-85

SKILLING, HELLE, CHRISTIANSEN, ROBERTSON — Structural & Civil Engineers

PROJECT: THE WORLD TRADE CENTER | TITLE: REFRIG. RM. CONN. DETAILS ADJ. TO 24"MECH. BASE | DATE: 10-15-68

REVISIONS

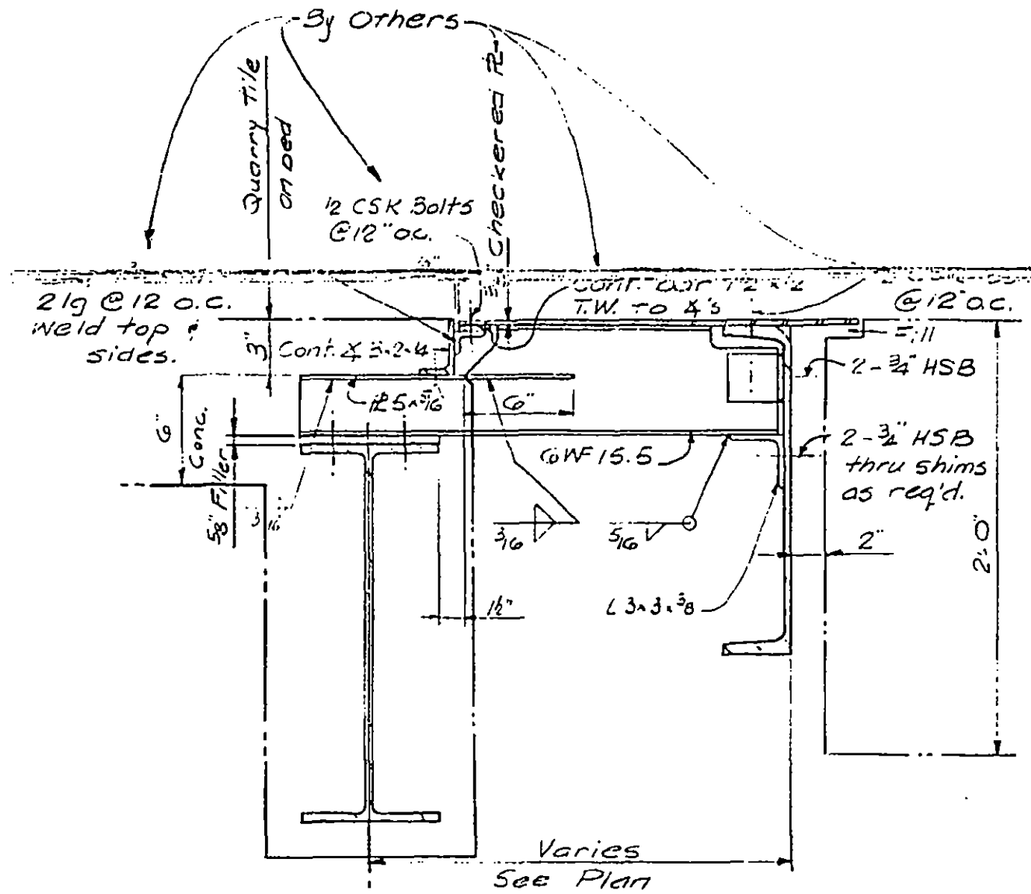

Work by others shown schematically only.
For full details refer to Archt's and Mech. Engr's dwgs.

LICENSED PROFESSIONAL ENGINEER — LESLIE E. ROBERTSON — No. 34360 — UNIVERSITY OF THE STATE OF NEW YORK

DESIGNED

DRAWN

REVIEWED

12-JK1-99

SKILLING, HELLE, CHRISTIANSEN, ROBERTSON — Structural & Civil Engineers

PROJECT: THE WORLD TRADE CENTER | TITLE: REFRIG. RM. CONN. DETAILS ADJ. TO 24" MECH. BASE | DATE: 10-15-68

REVISIONS

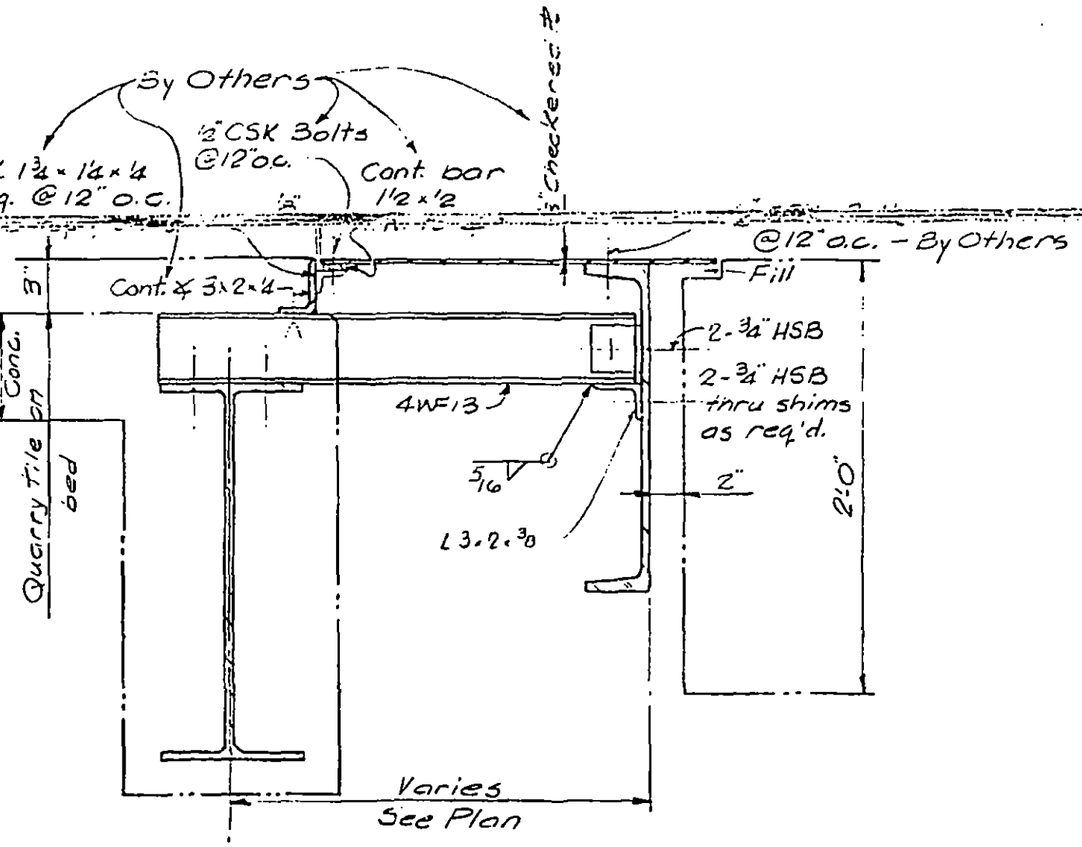

Work by others shown schematically only.
For full details refer to Archt's and Mech. Engr's dwgs.

LICENSED PROFESSIONAL ENGINEER — LESLIE E. ROBERTSON — No. 34360 — UNIVERSITY OF THE STATE OF NEW YORK

DESIGNED

DRAWN

REVIEWED

12-JK1-99A

SKILLING - HELLE - CHRISTIANSEN - ROBERTSON Structural & Civil Engineers

PROJECT THE WORLD TRADE CENTER | TITLE BEAM CONNECTION DETAIL TO N. OF TOWER 'A' - A101 → A108 | DATE 11-24-67

REVISIONS
1-5-68
5-1-68

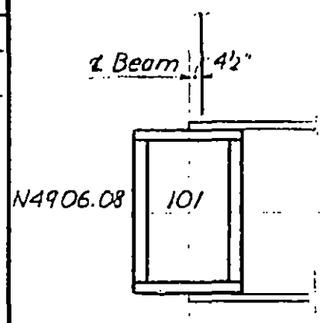

A-101

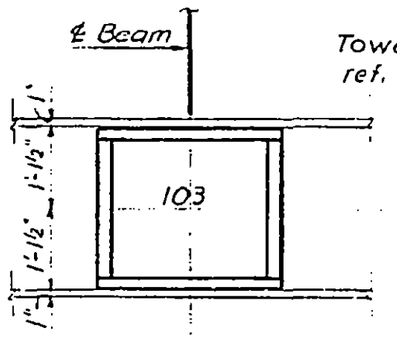

A-102

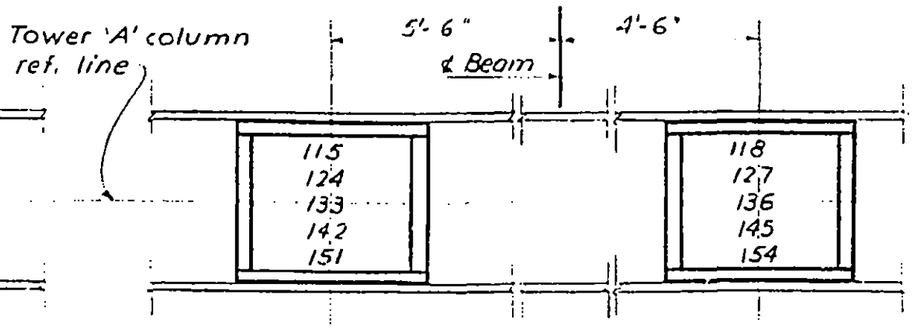

A-103 & A-104

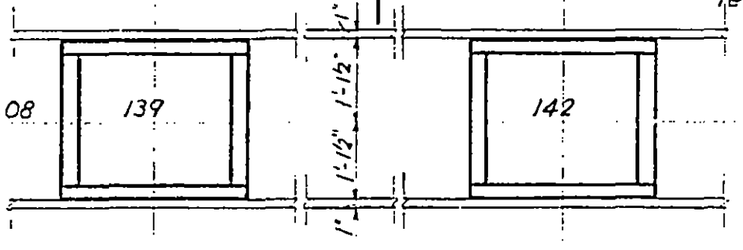

A-105

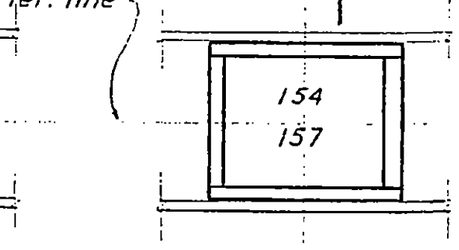

A-106

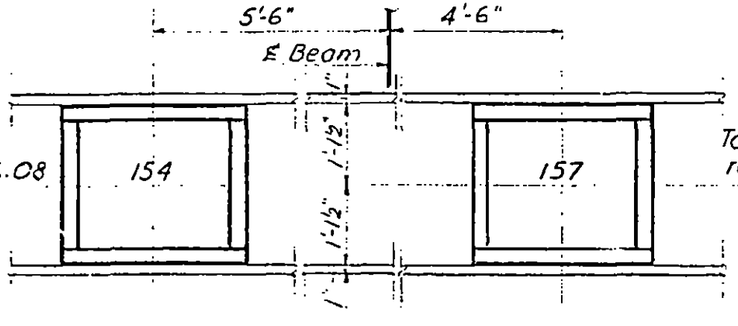

A-107

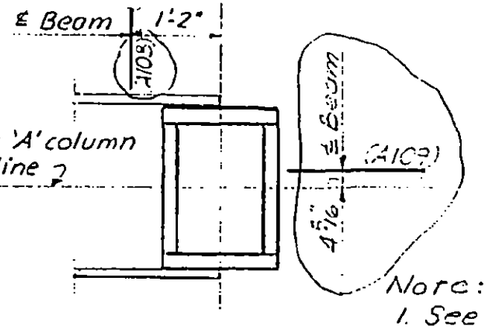

A-108

A-109

Note:
1. See schedule on 12-JK1-107

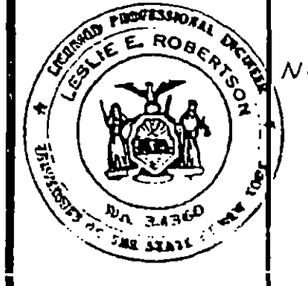

12-JK1-101

SKILLING - HELLE - CHRISTIANSEN - ROBERTSON Structural & Civil Engineers

PROJECT THE WORLD TRADE CENTER | TITLE BEAM CONNECTION DETAIL TO E OF TOWER 'A' A-201-A205 | DATE 5-1-68

REVISIONS

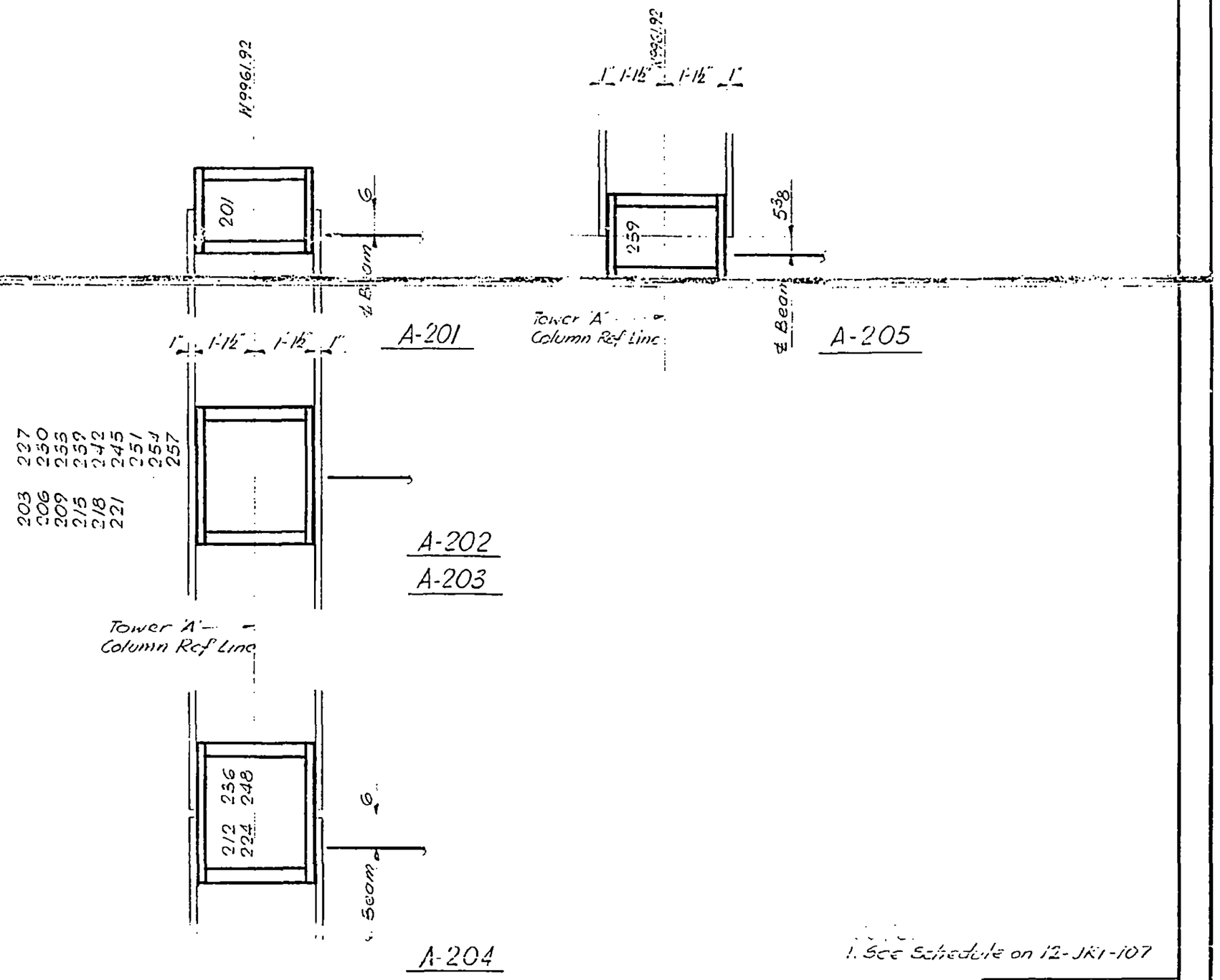

1. See Schedule on 12-JK1-107

12-JK1-102

LICENSED PROFESSIONAL ENGINEER
LESLIE E. ROBERTSON
No. 34360
UNIVERSITY OF THE STATE OF NEW YORK

SKILLING - HELLE - CHRISTIANSEN - ROBERTSON Structural & Civil Engineers

PROJECT THE WORLD TRADE CENTER | TITLE BEAM CONNECTION DETAIL TO S. OF TOWER "A" - A301 THRU A310 | DATE 11-24-67

REVISIONS

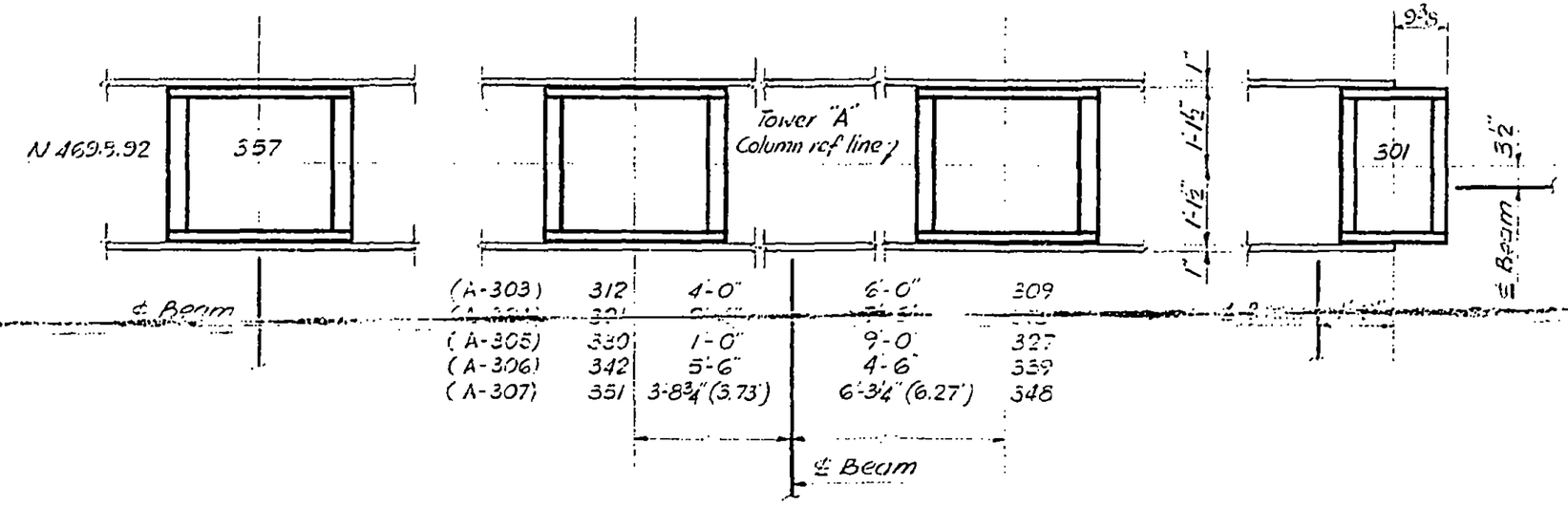

A-308 | A-303 Thru A-307 | A-301 & A-302

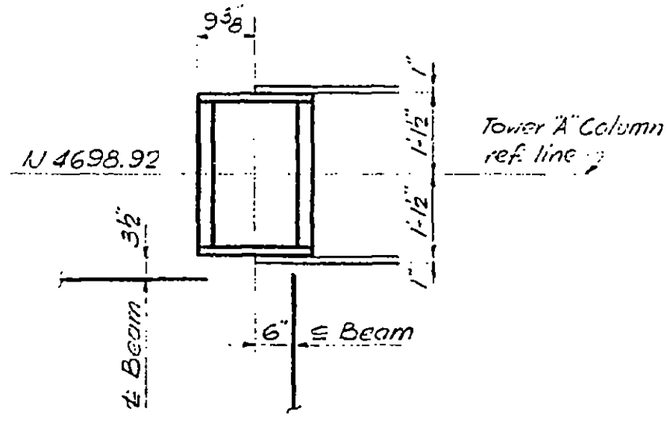

A-309 & A-310

Note:
1. See Schedule on 12-JK1-108

N

LICENSED PROFESSIONAL ENGINEER
LESLIE E. ROBERTSON
No. 34360
UNIVERSITY OF THE STATE OF NEW YORK

12-JK1-103

SKILLING - HELLE - CHRISTIANSEN - ROBERTSON Structural & Civil Engineers

PROJECT THE WORLD TRADE CENTER | TITLE BEAM CONNECTION DETAIL TO W. OF TOWER "A" A401 THRU A408 | DATE 11-24-67

REVISIONS

1-5-68

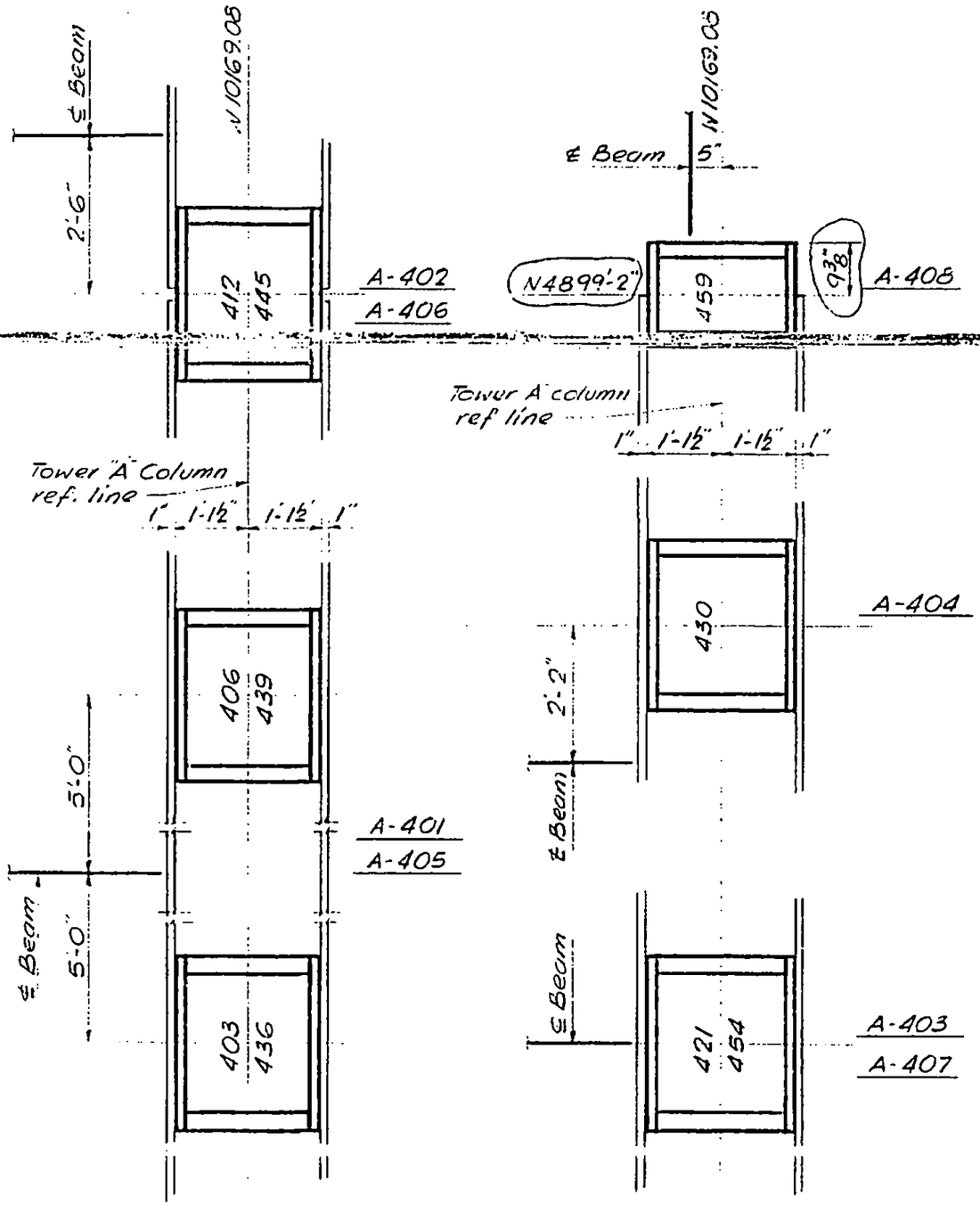

Note:
1. See Schedule on 12-JK1-108

LICENSED PROFESSIONAL ENGINEER LESLIE E. ROBERTSON No. 34360 UNIVERSITY OF THE STATE OF NEW YORK

12-JK1-104

SKILLING - HELLE - CHRISTIANSEN - ROBERTSON Structural & Civil Engineers

PROJECT

TITLE BEAM CONNECTION DETAIL TO TOWER TYPE A & A1

DATE 5-1-68

REVISIONS

12-3-68

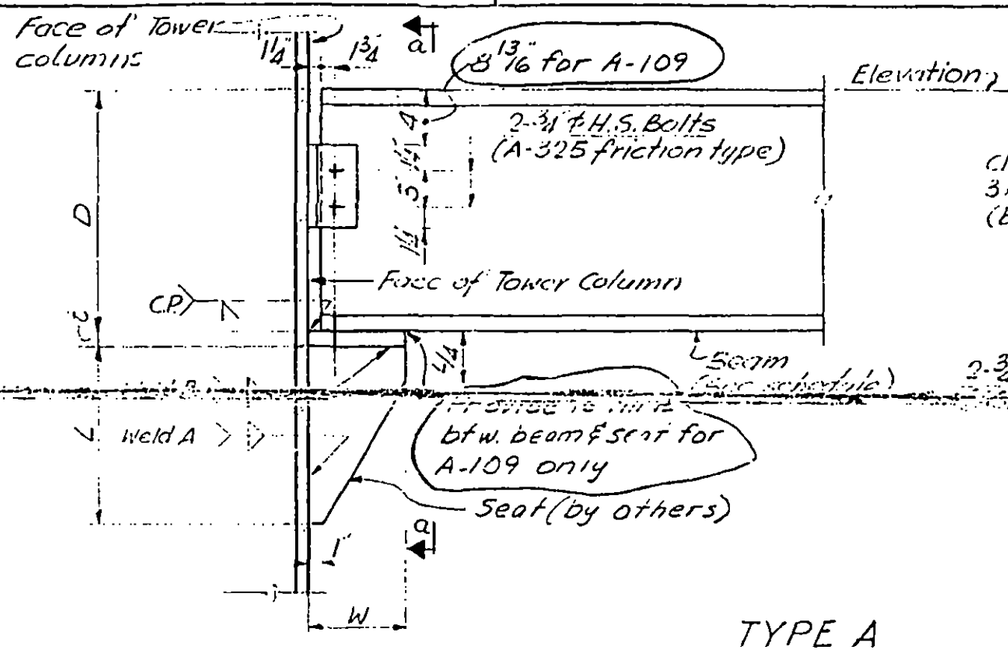

TYPE A

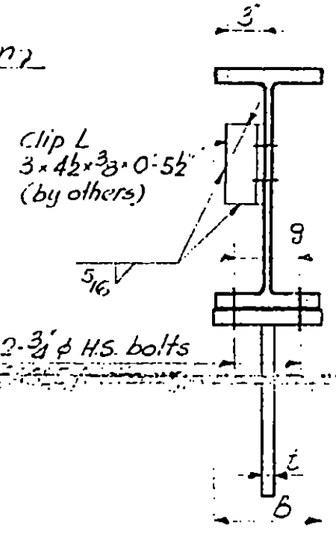

Section a-a

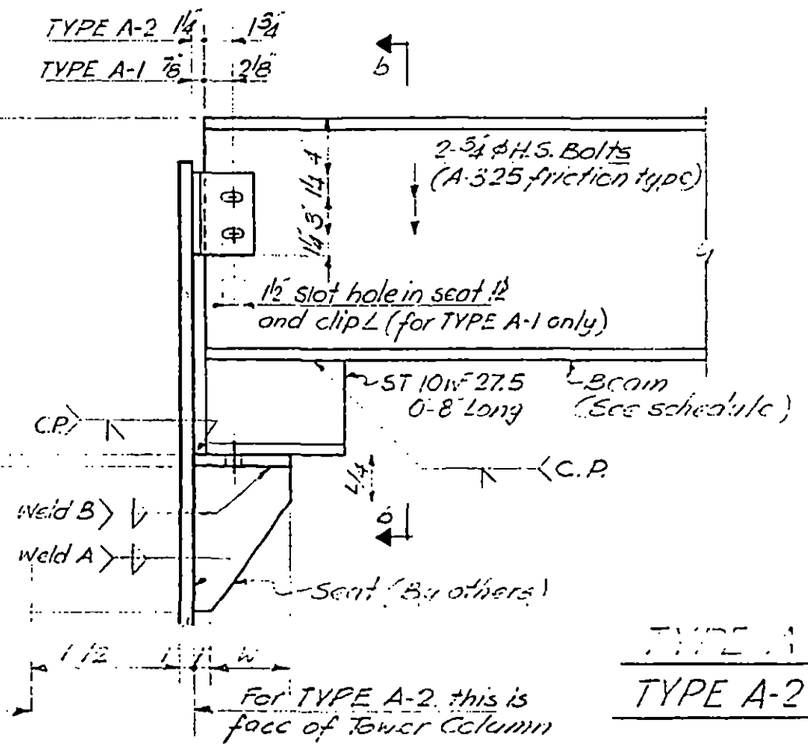

TYPE A-2 (No slot holes)

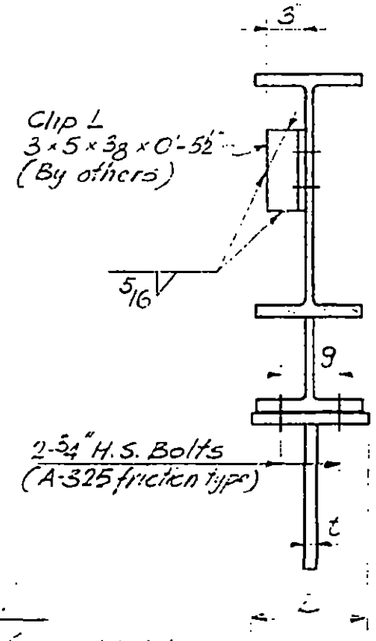

Note
1. Provide 1¾" × 7/16 washers (Fy=50 KSI) sq. or round where slot holes occurs.
2. See schedule 12-JK1-107 & 108 for locations

Section b-b

12-JK1-105

LICENSED PROFESSIONAL ENGINEER
LESLIE E. ROBERTSON
No. 34360
UNIVERSITY OF THE STATE OF NEW YORK

SKILLING - HELLE - CHRISTIANSEN - ROBERTSON Structural & Civil Engineers

PROJECT THE WORLD TRADE CENTER | TITLE BEAM CONNECTION DETAIL TO TOWER - TYPE B & C | DATE 11-24-67

REVISIONS

1-5-68

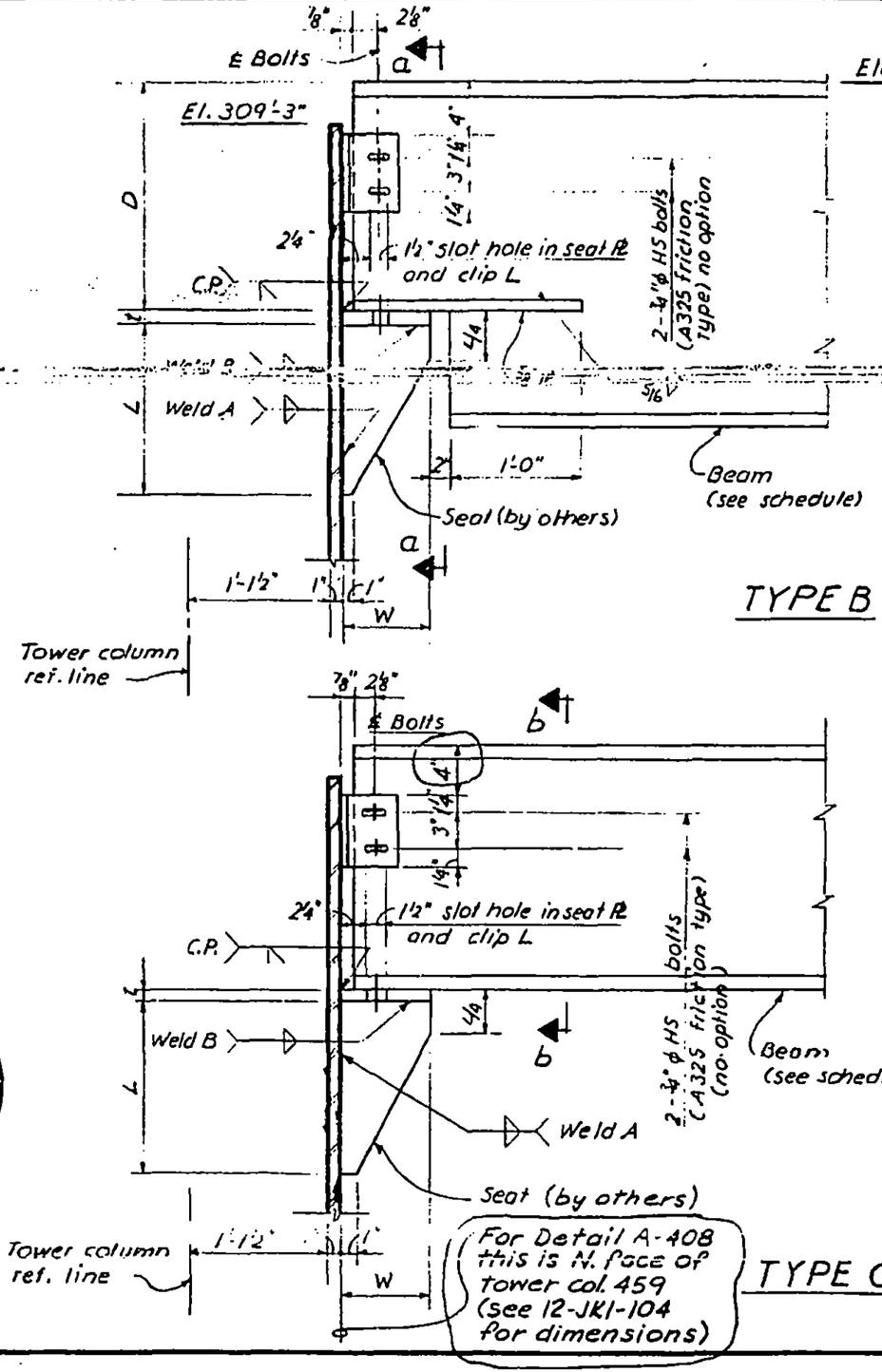

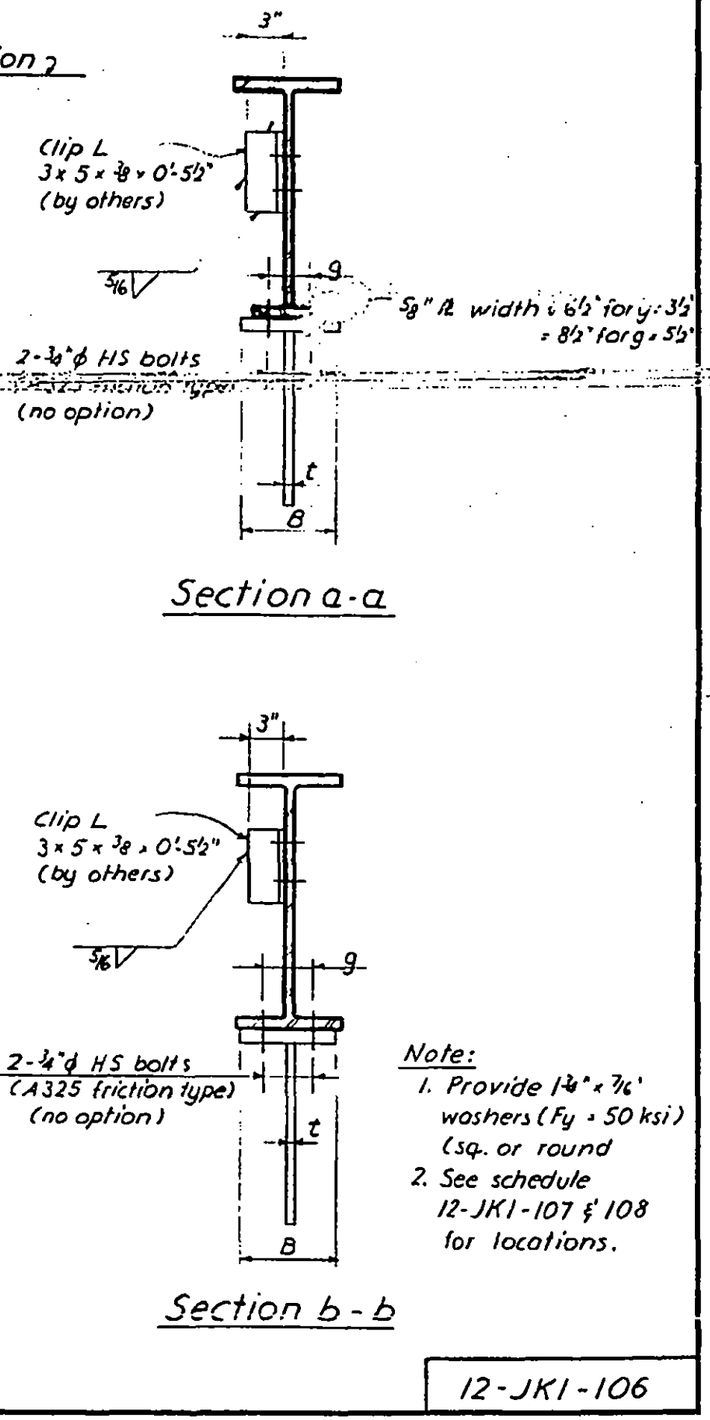

LICENSED PROFESSIONAL ENGINEER
LESLIE E. ROBERTSON
No. 34360
UNIVERSITY OF THE STATE OF NEW YORK

12-JK1-106

SKILLING - HELLE - CHRISTIANSEN - ROBERTSON Structural & Civil Engineers

PROJECT THE WORLD TRADE CENTER | TITLE SCHEDULE FOR BEAM CONNECTION TO TOWER 'A' | DATE 11-24-67

REVISIONS

5-1-68

12-3-68

DETAIL No.	BEAM			CONNECTION									g
				TYPE	SEAT PL			STIFFENER PL			WELD SIZE		
	SIZE	ELEV.	D		W	t	B	W	t	L	A	B	
A-101	14 WF 30	308'-3"		C	8"	1/2"	6 1/2"	8"	1/2"	15"	5/16	5/16	3 1/2"
A-102	14 WF 34	308'-8 3/4"		C	8"	1/2"	6 1/2"	8"	1/2"	15"	5/16	5/16	3 1/2"
A-103	21 B 49	309'-6"		C	6"	9/16"	6 1/2"	6"	9/16"	12"	5/16	5/16	3 1/2"
A-104				(See	12 -	JK1-	109	for	detail)				
A-105	21 B 49	309'-6"		C	6"	1/2"	6 1/2"	6"	1/2"	13"	5/16	5/16	3 1/2"
A-106	21 WF 96	309'-6"		C	5"	9/16"	8 1/2"	5"	9/16"	10"	5/16	5/16	5 1/2"
A-107	21 WF 96	309'-6"		C	5"	9/16"	8 1/2"	5"	9/16"	10"	5/16	5/16	5 1/2"
A-108	21 WF 96	309'-6"		C	5"	9/16"	8 1/2"	5"	9/16"	10"	5/16	5/16	5 1/2"
A-109	21 B 44	309'-5 13/16"		A	7"	1/2"	6 1/2"	7"	1/2"	12"	5/16	5/16	3 1/2"
* A-201	16 WF 36	309'-1"		C	6"	1/2"	6 1/2"	6"	1/2"	12"	5/16	5/16	3 1/2
A-202	16 WF 36	309'-1"		C	6"	1/2"	6 1/2"	6"	1/2"	12"	5/16	5/16	3 1/2
A-203	16 WF 36	309'-1"	20 3/4"	A-1	6"	1/2"	8 1/2"	6"	1/2"	12"	5/16	5/16	5 1/2"
A-204	16 WF 36	309'-1"	20 3/4"	A-1	6"	1/2"	8 1/2"	6"	1/2"	12"	5/16	5/16	5 1/2"
A-205	16 WF 36	309'-1"	20 3/4"	A-2	6"	1/2"	8 1/2"	6"	1/2"	12"	5/16	5/16	5 1/2"

NOTE:-

1. See dwg 12-JK1-105 & 106 for detail of connection.
2. * — Provide type C seat connection & clip L as shown on 12-JK1-106 and field weld to tower spandrel ⊕.

LICENSED PROFESSIONAL ENGINEER LESLIE E. ROBERTSON No. 34360 UNIVERSITY OF THE STATE OF NEW YORK

12-JK1-107

SKILLING - HELLE - CHRISTIANSEN - ROBERTSON Structural & Civil Engineers

PROJECT THE WORLD TRADE CENTER | TITLE SCHEDULE FOR BEAM CONNECTION TO TOWER 'A' | DATE 11-24-67

REVISIONS

1-5-68

5-1-69

DETAIL No.	BEAM			CONNECTION									g
				TYPE	SEAT ℄			STIFFENER ℄			WELD SIZE		
	SIZE	ELEV.	D		W	t	B	W	t	L	A	B	
A-301	16WF36	309'-3"		C	7"	1/2"	6 1/2"	7"	1/2"	13"	5/16"	5/16"	3 1/2"
A-302	30WF99	309'-3"	1'-8"	B	8	3/4	8 1/2	8	3/4	19	3/8	3/8	5 1/2
A-303	30WF99	309'-3"	1'-8"	B	9	3/4	8 1/2	9	3/4	18	1/2	1/2	5 1/2
A-304	30WF99	309'-3"	1'-8"	B	9	3/4	8 1/2	9	3/4	18	1/2	1/2	5 1/2
A-305	30WF108	309'-3"	1'-8"	B	10	3/4	9	10	3/4	20	1/2	1/2	5 1/2
A-306	30WF99	309'-3"	1'-8"	B	10	3/4	9	10	3/4	20	1/2	1/2	5 1/2
A-307	33WF130	308'-8"	1'-8"	B	9	13/16	9	9	13/16	20	5/8	5/8	5 1/2
A-308	33WF141	308'-8"		C	5	7/8	6 1/2	5	7/8	15	5/16	5/16	5 1/2
A-309	16WF45	308'-4"		C	6	1/2	6 1/2	6	1/2	12	5/16	5/16	3 1/2
A-310				(See 12-JK1-110 for detail)									
A-401	18WF55	307'-5"		C	5	9/16	6 1/2	5	9/16	11	5/16	5/16	3 1/2
A-402	24B55	307'-11"		C	↕	↕	↕	↕	↕	↕	↕	↕	↕
A-403	18WF55	307'-11"		C									
A-404	↕	307'-11"		C									
A-405		308'-1"		C									
A-406	↕	308'-1"		C	↕	↕	↕	↕	↕	↕	↕	↕	↕
A-407	18WF55	308'-3"		C	5	9/16	6 1/2	5	9/16	11	↕	↕	3 1/2
A-408	36WF135	308'-3"		C	7	7/8	9	7	7/8	20	5/16	5/16	5 1/2

NOTE:-

1. See dwg 12-JK1-105 & 106 for detail of connection.

LICENSED PROFESSIONAL ENGINEER
LESLIE E. ROBERTSON
No. 34360
UNIVERSITY OF THE STATE OF NEW YORK

SKILLING - HELLE - CHRISTIANSEN - ROBERTSON Structural & Civil Engineers

PROJECT THE WORLD TRADE CENTER | TITLE DETAIL OF BEAM CONNECTION TO TOWER 'A' - A-104 | DATE 11-24-67

REVISIONS

12-3-68

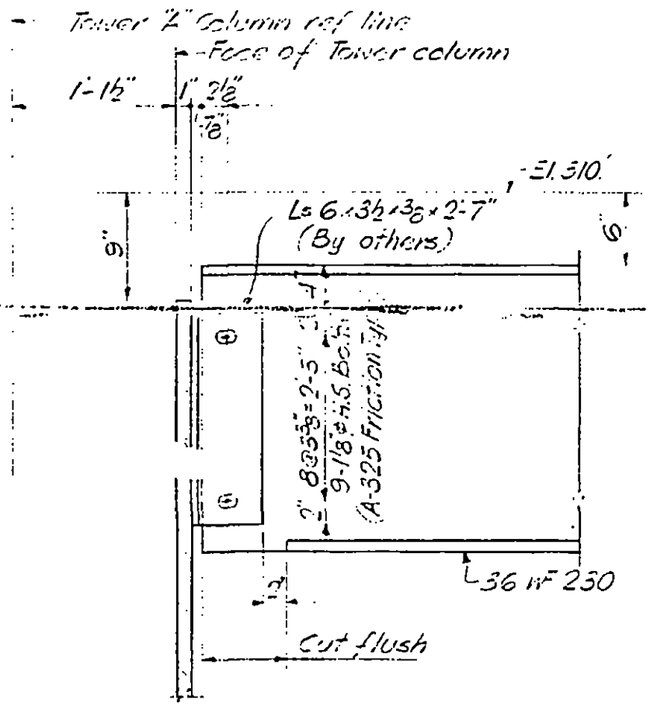

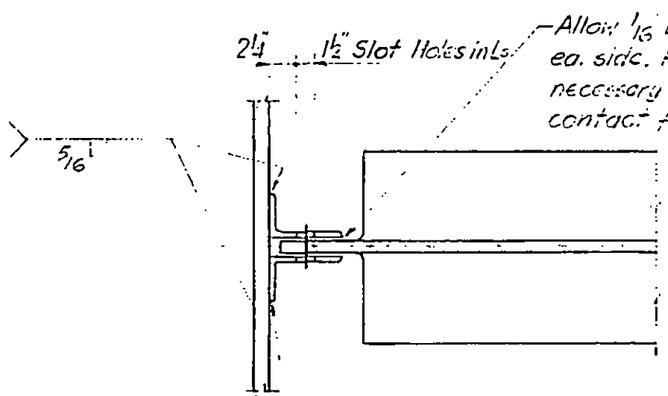

NOTE:
1. Provide 2½ - ⅝ washers (sq. or round) with Fy=50 KSI.

LICENSED PROFESSIONAL ENGINEER
LESLIE E. ROBERTSON
No. 34360
UNIVERSITY OF THE STATE OF NEW YORK

12-JKI-109

SKILLING - HELLE - CHRISTIANSEN - ROBERTSON Structural & Civil Engineers

PROJECT THE WORLD TRADE CENTER | TITLE BEAM CONNECTION TO TOWER 'A' – A-310 | DATE 11-24-67

REVISIONS

1-5-68

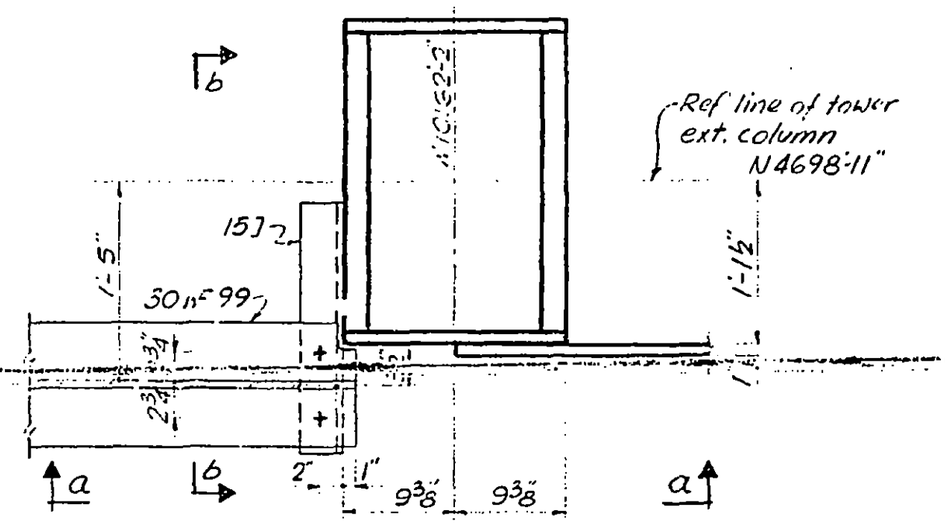

PLAN

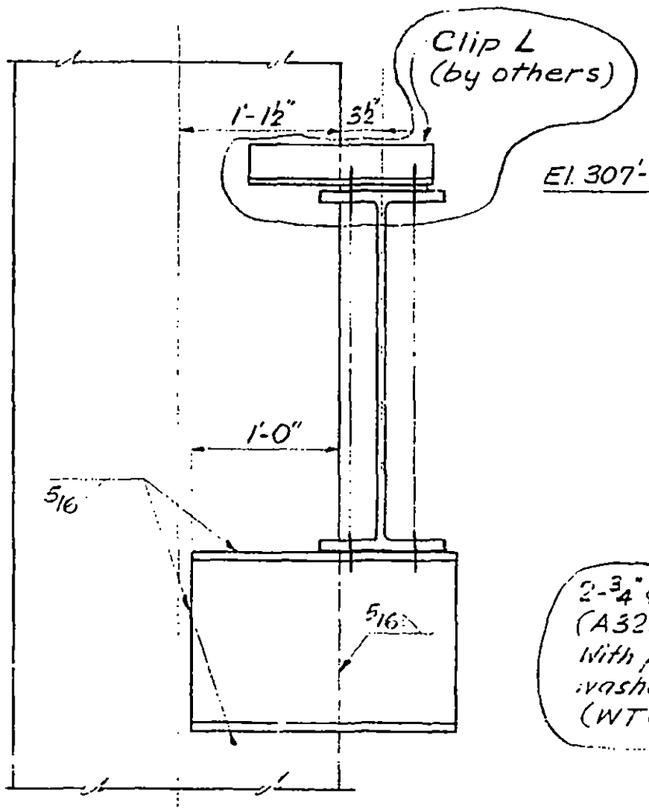

Section b-b

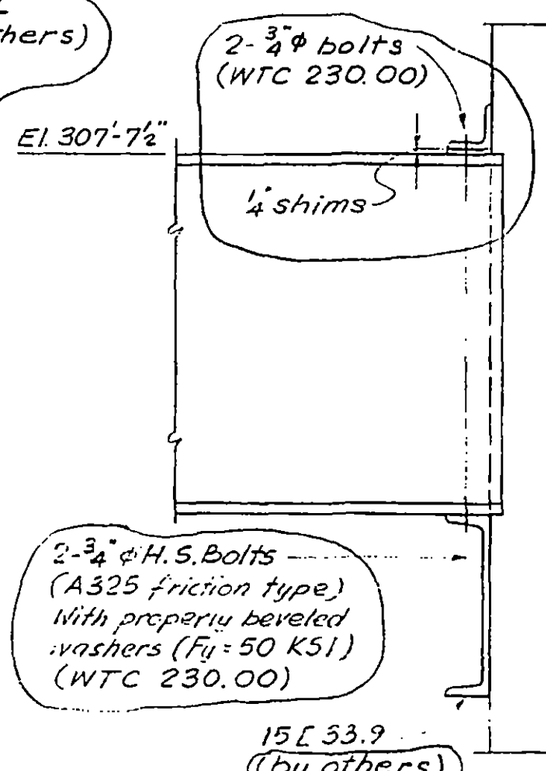

Section a-a

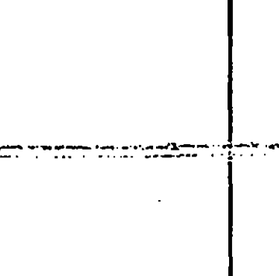

12-JK1-110

SKILLING - HELLE - CHRISTIANSEN - ROBERTSON Structural & Civil Engineers

PROJECT THE WORLD TRADE CENTER | TITLE BEAM CONNECTION TO TOWER "A" | DATE 11-24-67

REVISIONS
1-10-68
6-28-68

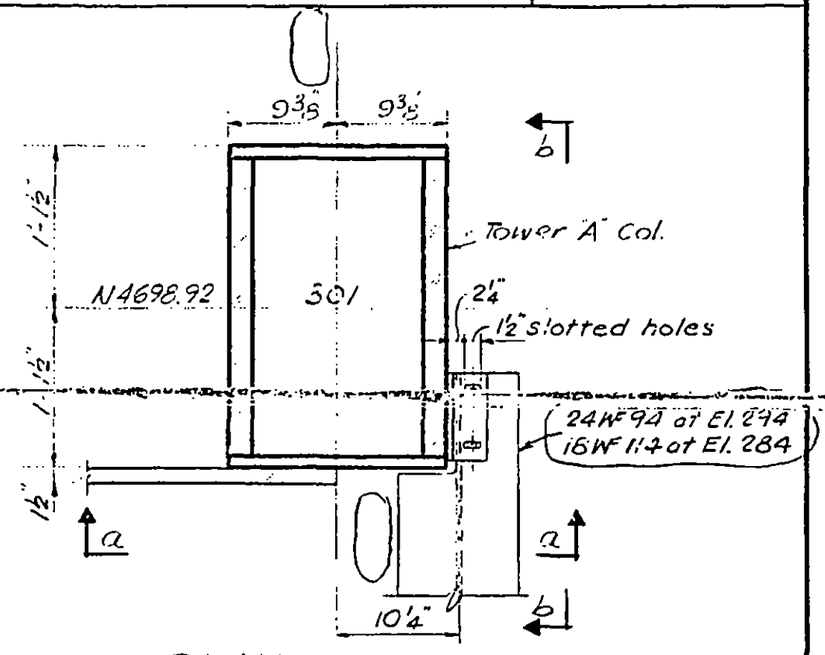

PLAN

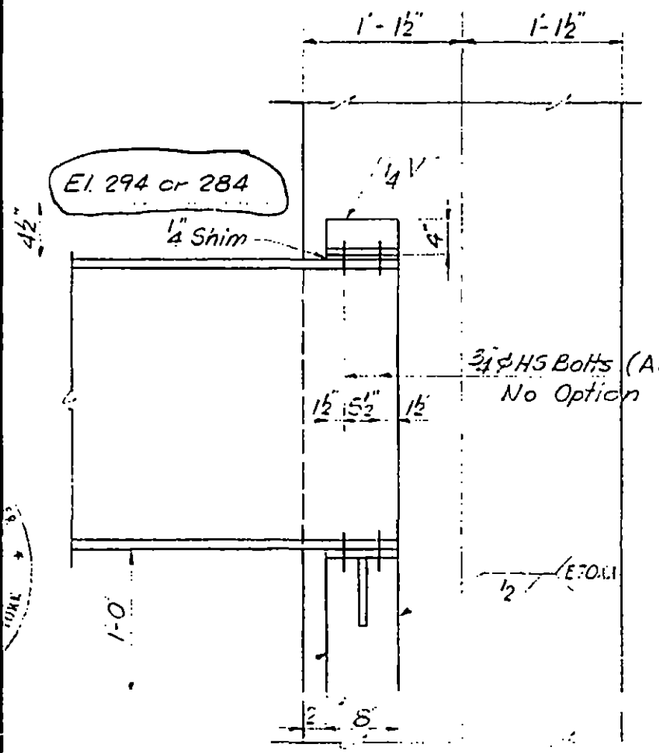

Section b-b

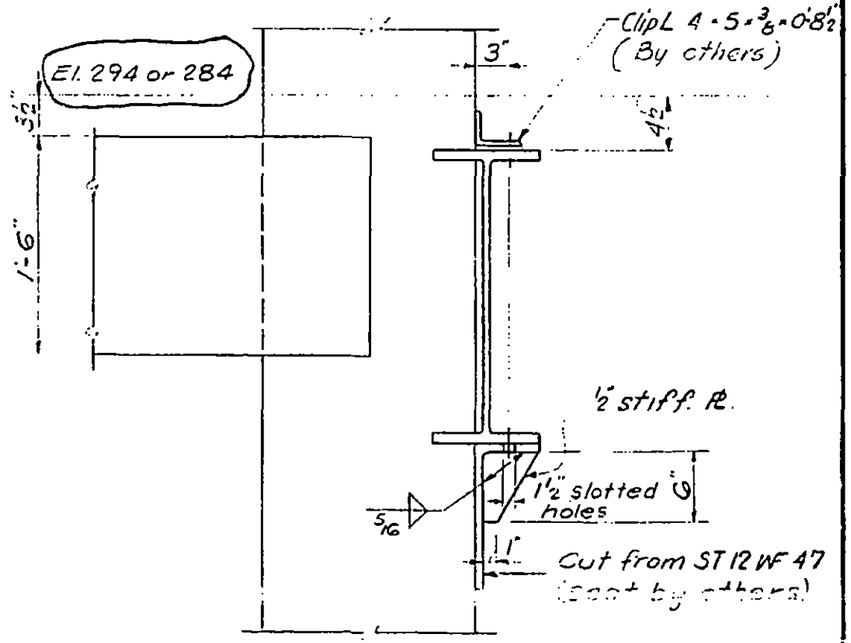

Section a-a

12-JK1-111

LICENSED PROFESSIONAL ENGINEER LESLIE E. ROBERTSON No. 34360 UNIVERSITY OF THE STATE OF NEW YORK

SKILLING - HELLE - CHRISTIANSEN - ROBERTSON Structural & Civil Engineers

PROJECT THE WORLD TRADE CENTER | TITLE DETAIL OF BEAM CONNECTION TO TOWER 'A' | DATE 11-24-67

REVISIONS

1-5-68

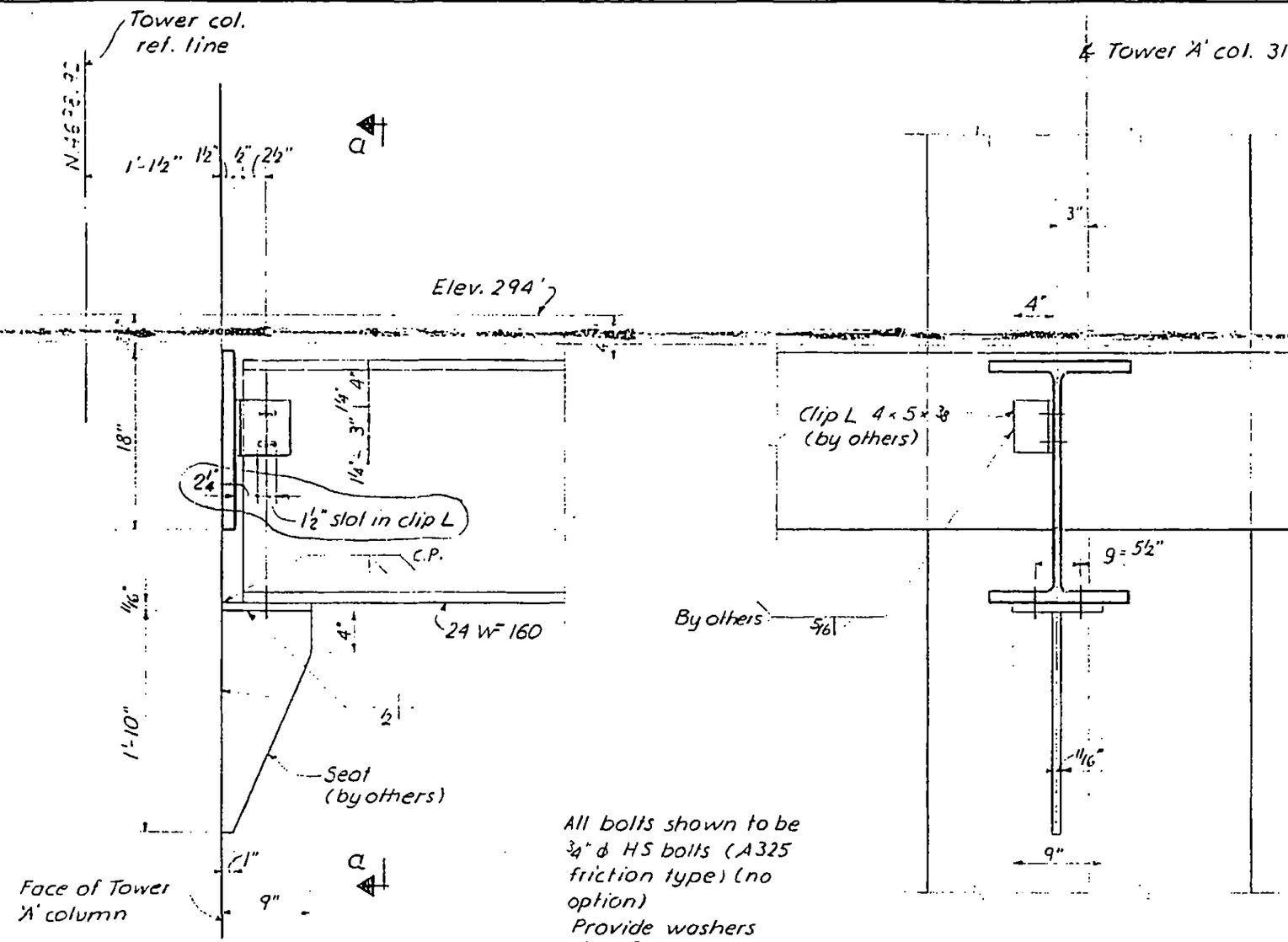

Elevation

Section a-a

All bolts shown to be ¾" ϕ HS bolts (A325 friction type) (no option)
Provide washers 1¾" × 7/16 (sq. or round) with Fy - 50 Ksi.

12-JKI-112

SKILLING - HELLE - CHRISTIANSEN - ROBERTSON Structural & Civil Enginoors

PROJECT THE WORLD TRADE CENTER | TITLE DETAIL OF BEAM CONNECTION TO TOWER 'A' | DATE 1-5-68

REVISIONS

1-10-68

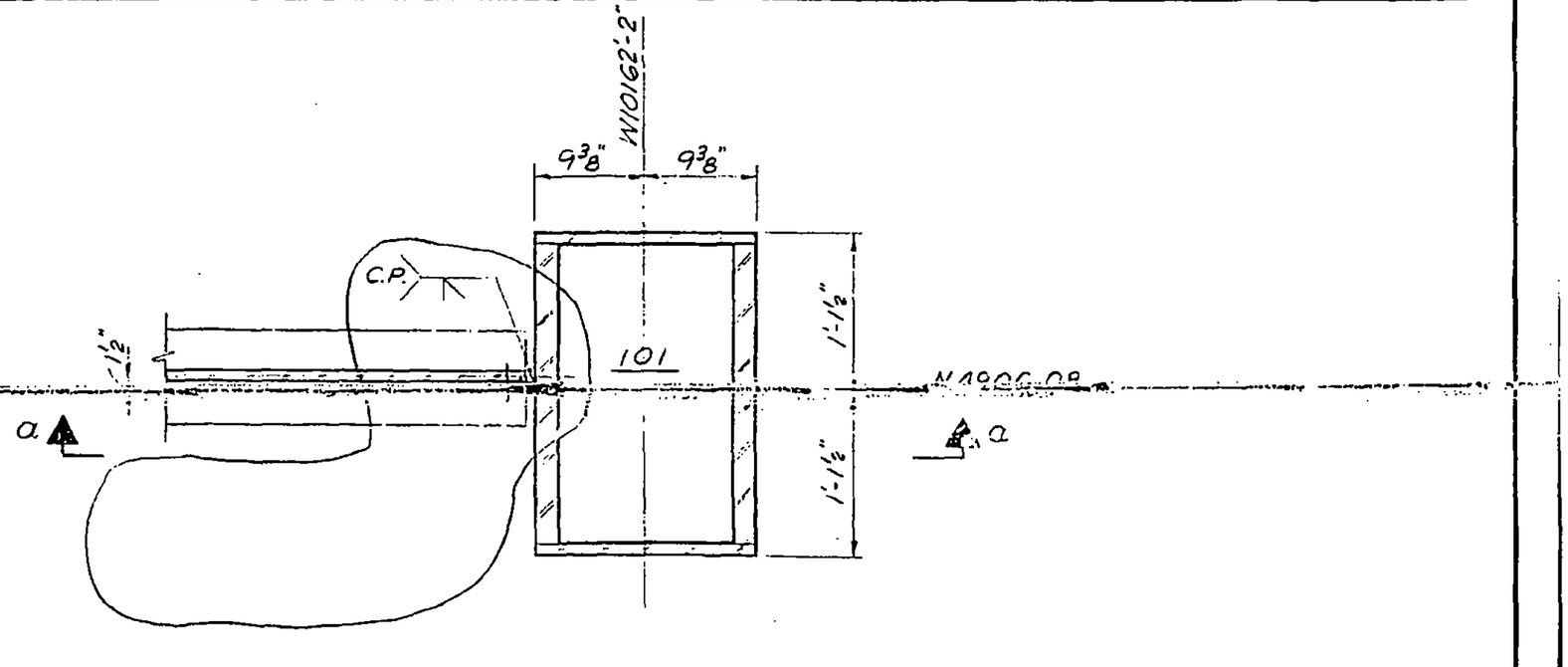

PLAN

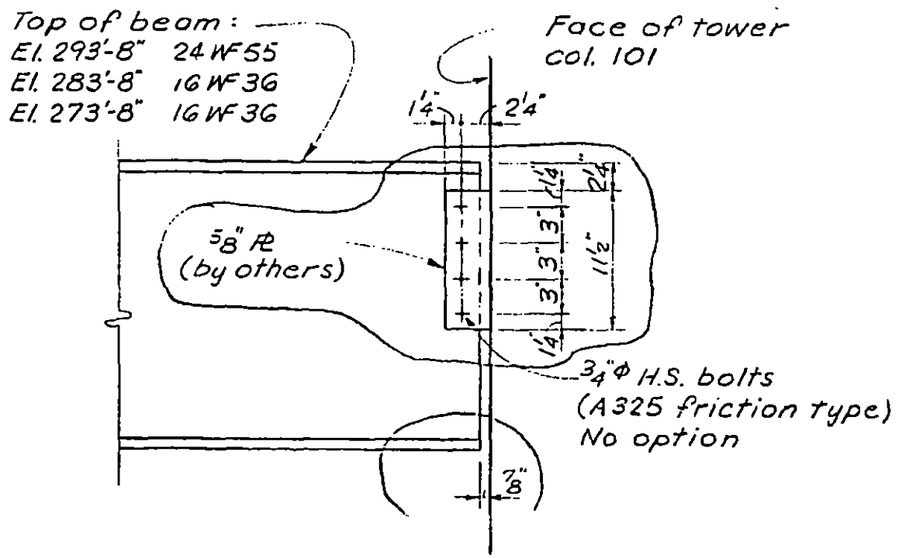

Section a-a

LICENSED PROFESSIONAL ENGINEER LESLIE E. ROBERTSON

12-JK1-113

SKILLING - HELLE - CHRISTIANSEN - ROBERTSON Structural & Civil Engineers

PROJECT THE WORLD TRADE CENTER | TITLE DETAIL OF BEAM CONNECTION TO TOWER 'A' | DATE 1-5-68

REVISIONS

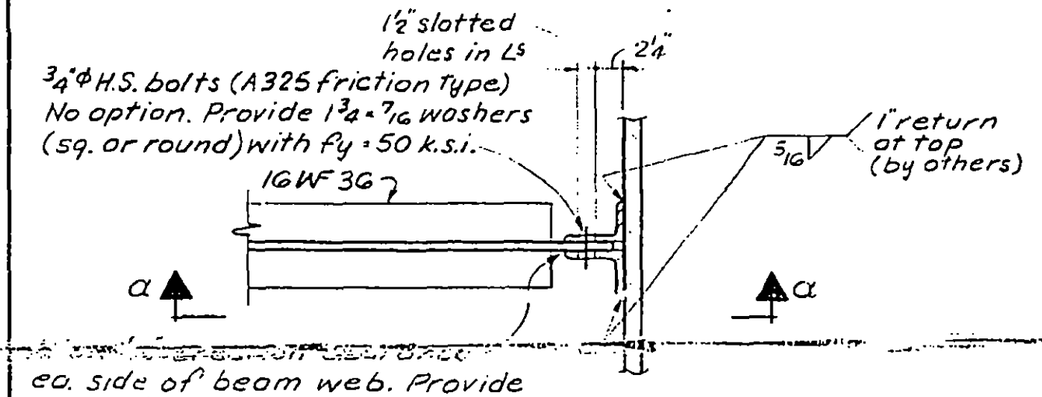

Section b-b

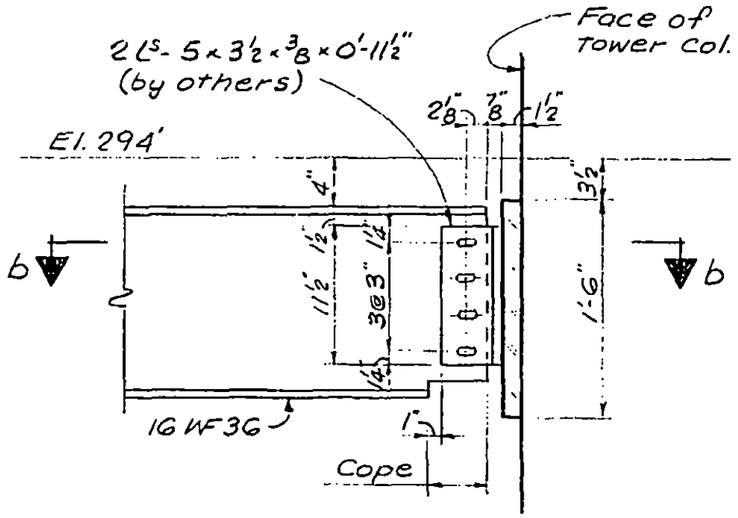

Section a-a

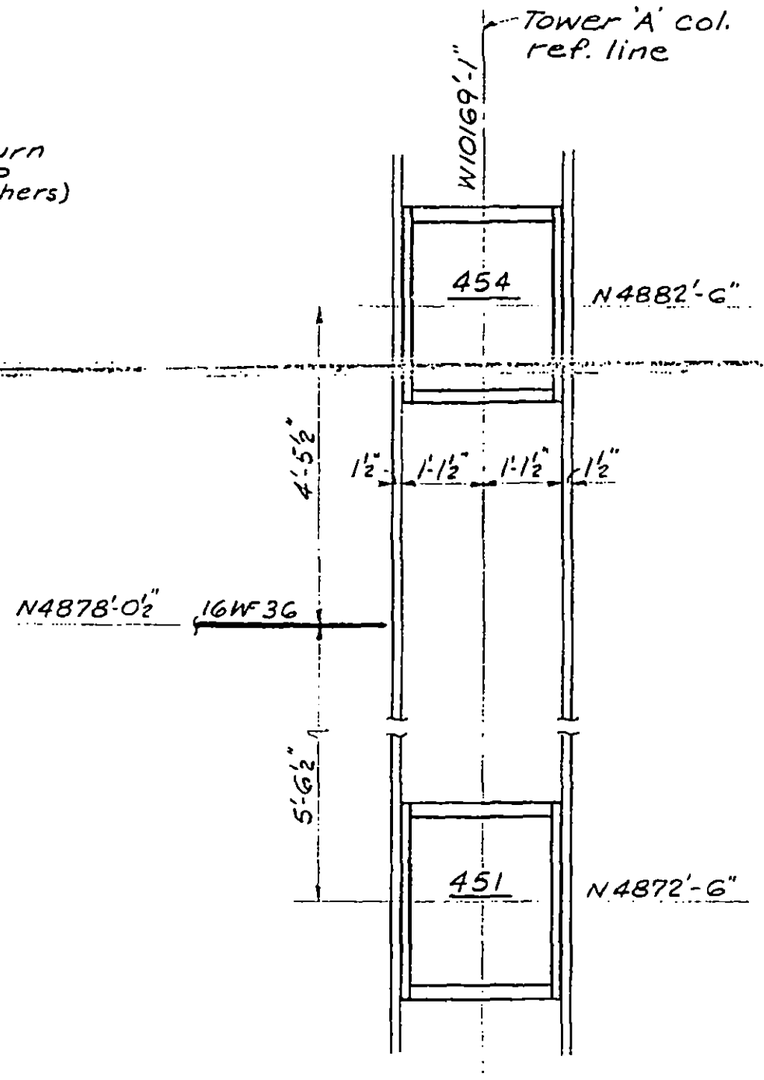

Location of beam

12-JK1-114

SKILLING - HELLE - CHRISTIANSEN - ROBERTSON Structural & Civil Engineers

PROJECT THE WORLD TRADE CENTER | TITLE DETAIL OF BEAM CONNECTION TO TOWER 'A' | DATE 1-5-68

REVISIONS

1-10-68

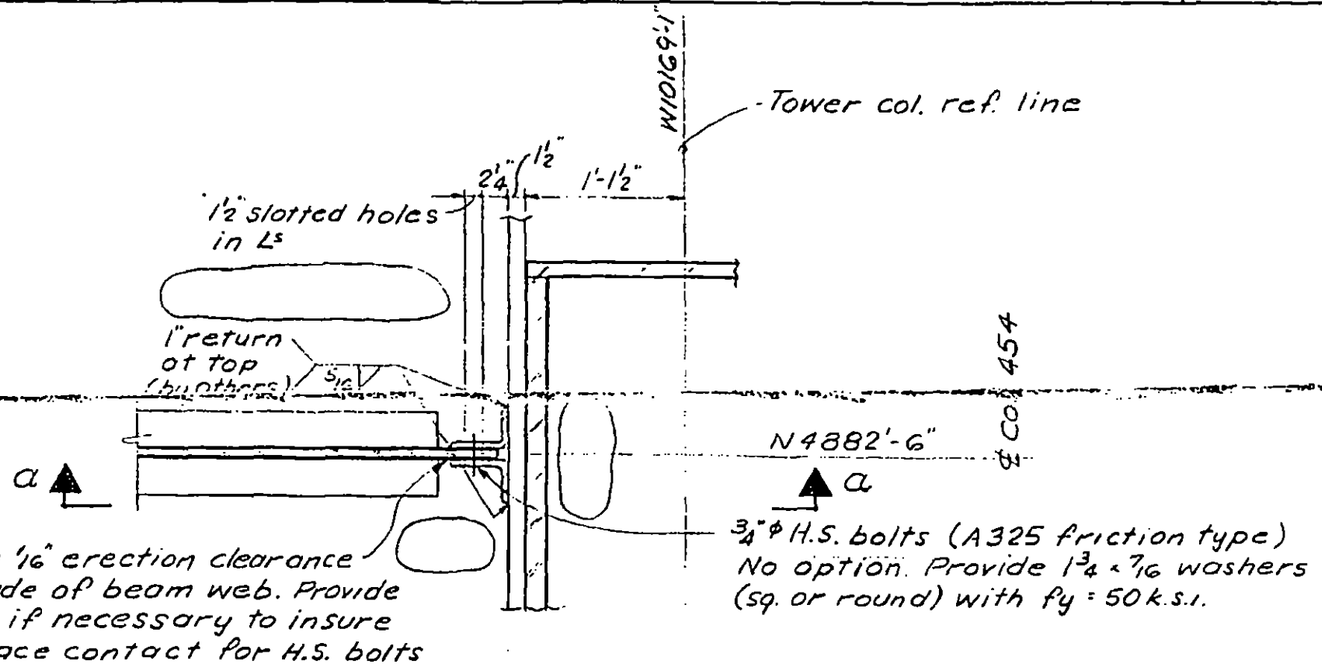

Section b-b

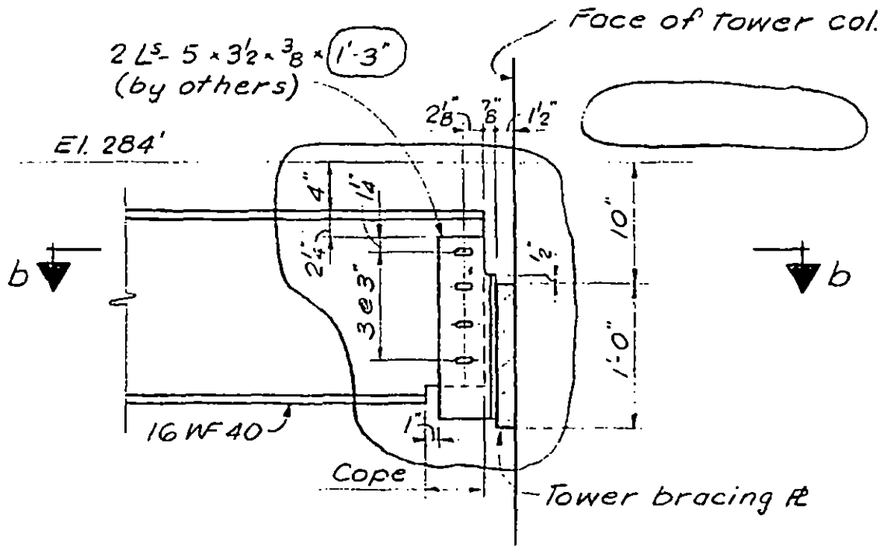

Section a-a

LICENSED PROFESSIONAL ENGINEER
LESLIE E. ROBERTSON
No. 34560
UNIVERSITY OF THE STATE OF NEW YORK

12-JK1-115

SKILLING - HELLE - CHRISTIANSEN - ROBERTSON Structural & Civil Engineers

PROJECT THE WORLD TRADE CENTER | TITLE DETAIL OF BEAM CONNECTION TO TOWER 'A' | DATE 1-5-68

REVISIONS

1-10-68

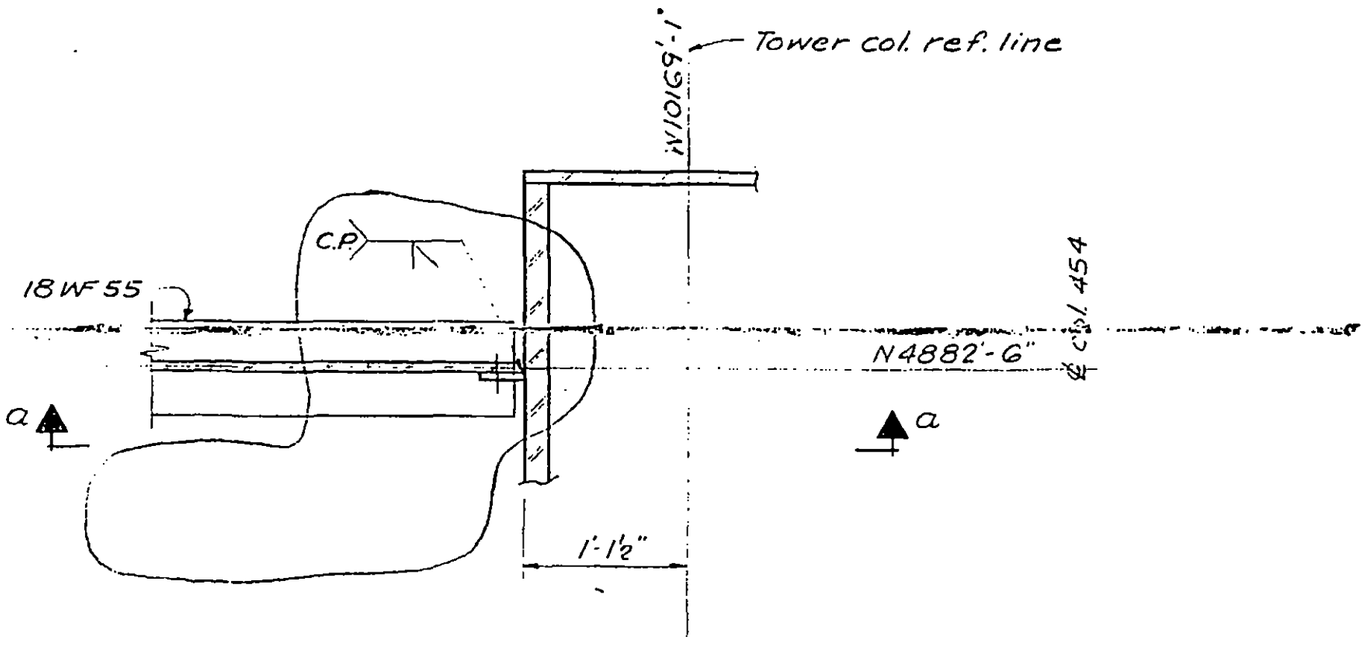

Section b-b

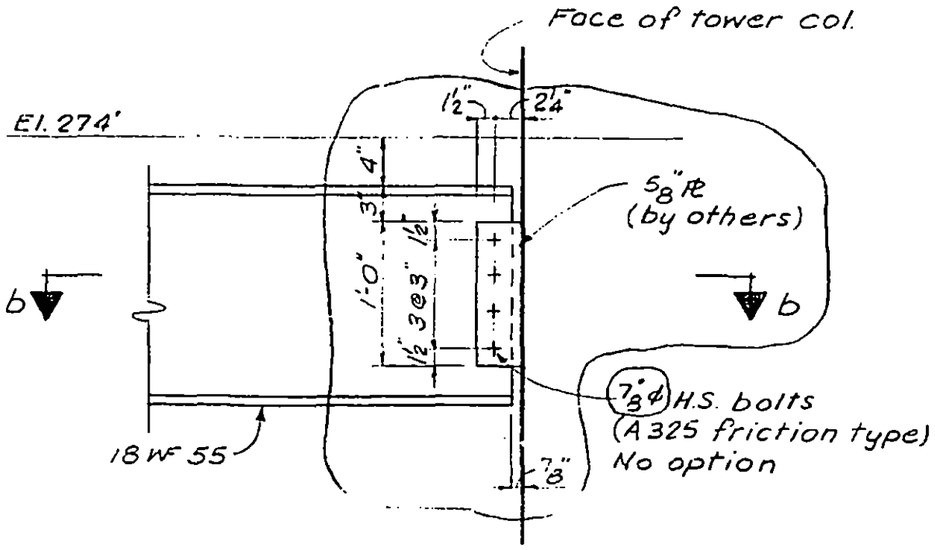

Section a-a

LESLIE E. ROBERTSON
LICENSED PROFESSIONAL ENGINEER
No. 34360
STATE OF NEW YORK

12-JK1-116

SKILLING - HELLE - CHRISTIANSEN - ROBERTSON Structural & Civil Engineers

PROJECT THE WORLD TRADE CENTER | TITLE DETAIL OF BEAM CONNECTION TO TOWER 'A' | DATE 6-28-68

REVISIONS

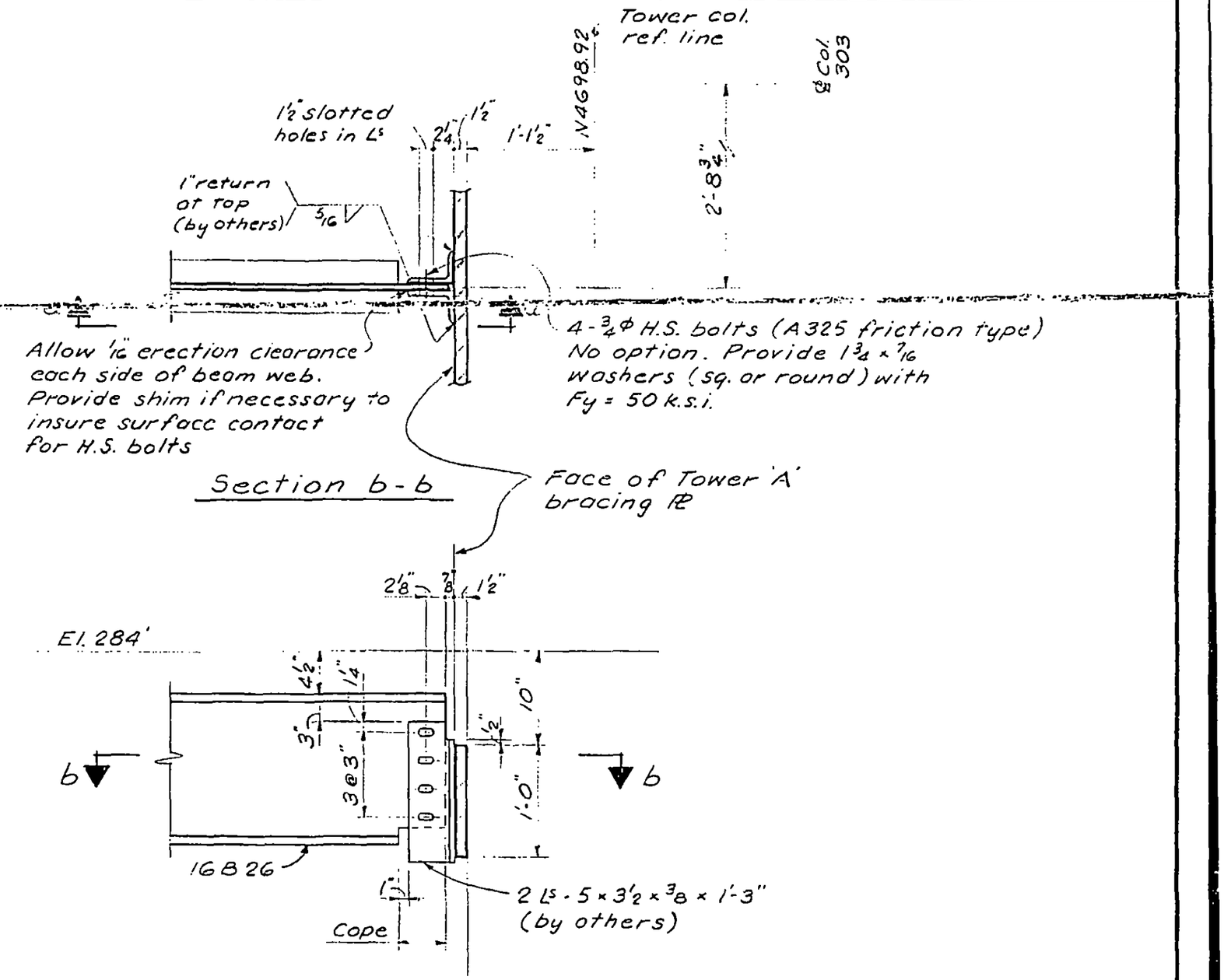

LICENSED PROFESSIONAL ENGINEER
LESLIE E. ROBERTSON
No. 34360
UNIVERSITY OF THE STATE OF NEW YORK

12-JK1-117

SKILLING - HELLE - CHRISTIANSEN - ROBERTSON Structural & Civil Engineers

PROJECT THE WORLD TRADE CENTER | TITLE DETAIL OF BEAM CONNECTION TO TOWER 'A' | DATE 6-28-68

REVISIONS

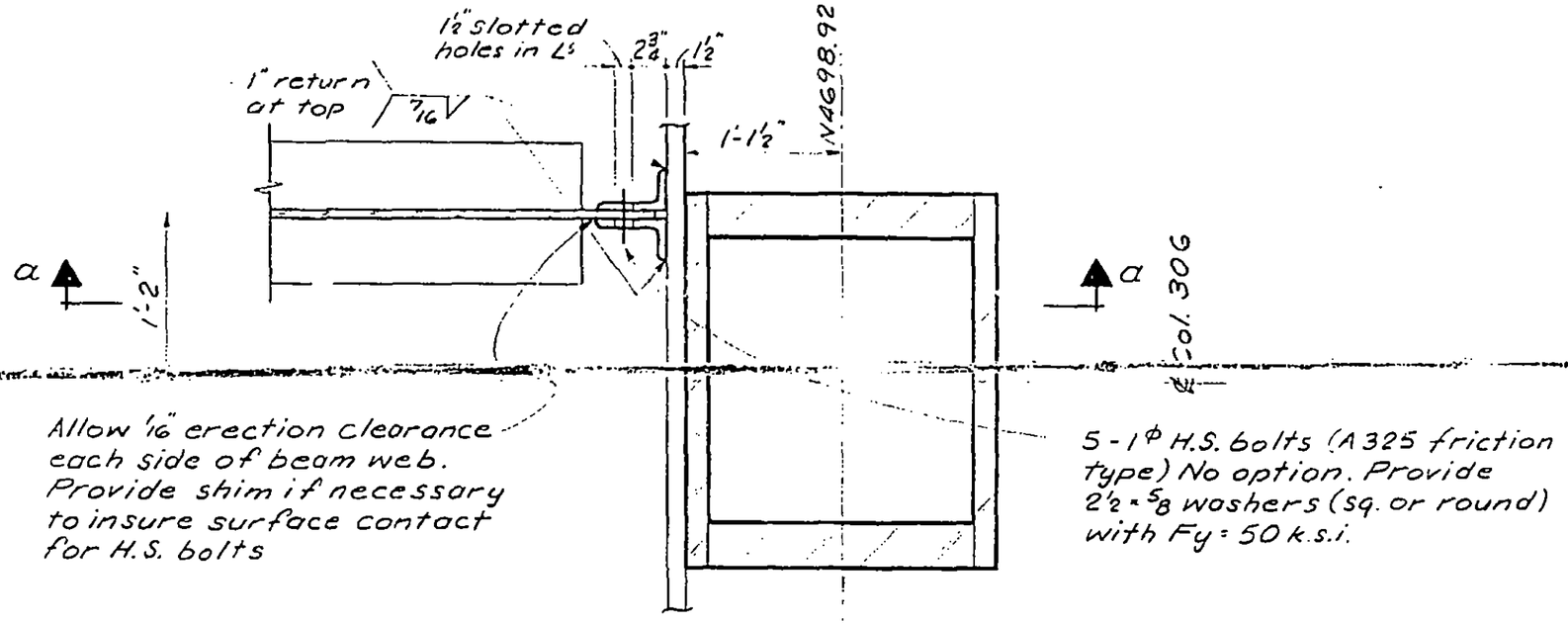

Section b-b

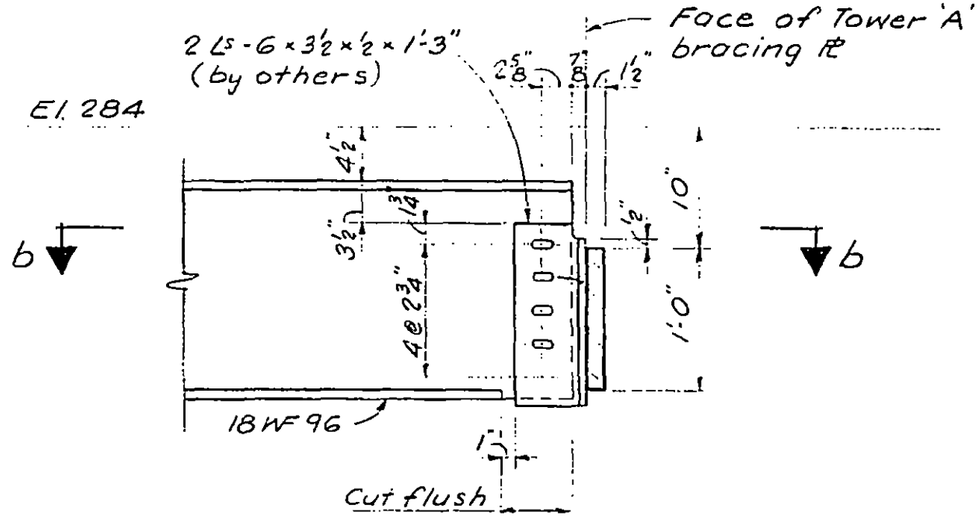

Section a-a

LICENSED PROFESSIONAL ENGINEER
LESLIE E. ROBERTSON
No. 34360
UNIVERSITY OF THE STATE OF NEW YORK

12-JK1-118

SKILLING, HELLE, CHRISTIANSEN, ROBERTSON — Structural & Civil Engineers

PROJECT: THE WORLD TRADE CENTER | TITLE: BEAM CONNECTION TO TOWER "A" | DATE: 10-15-68

REVISIONS

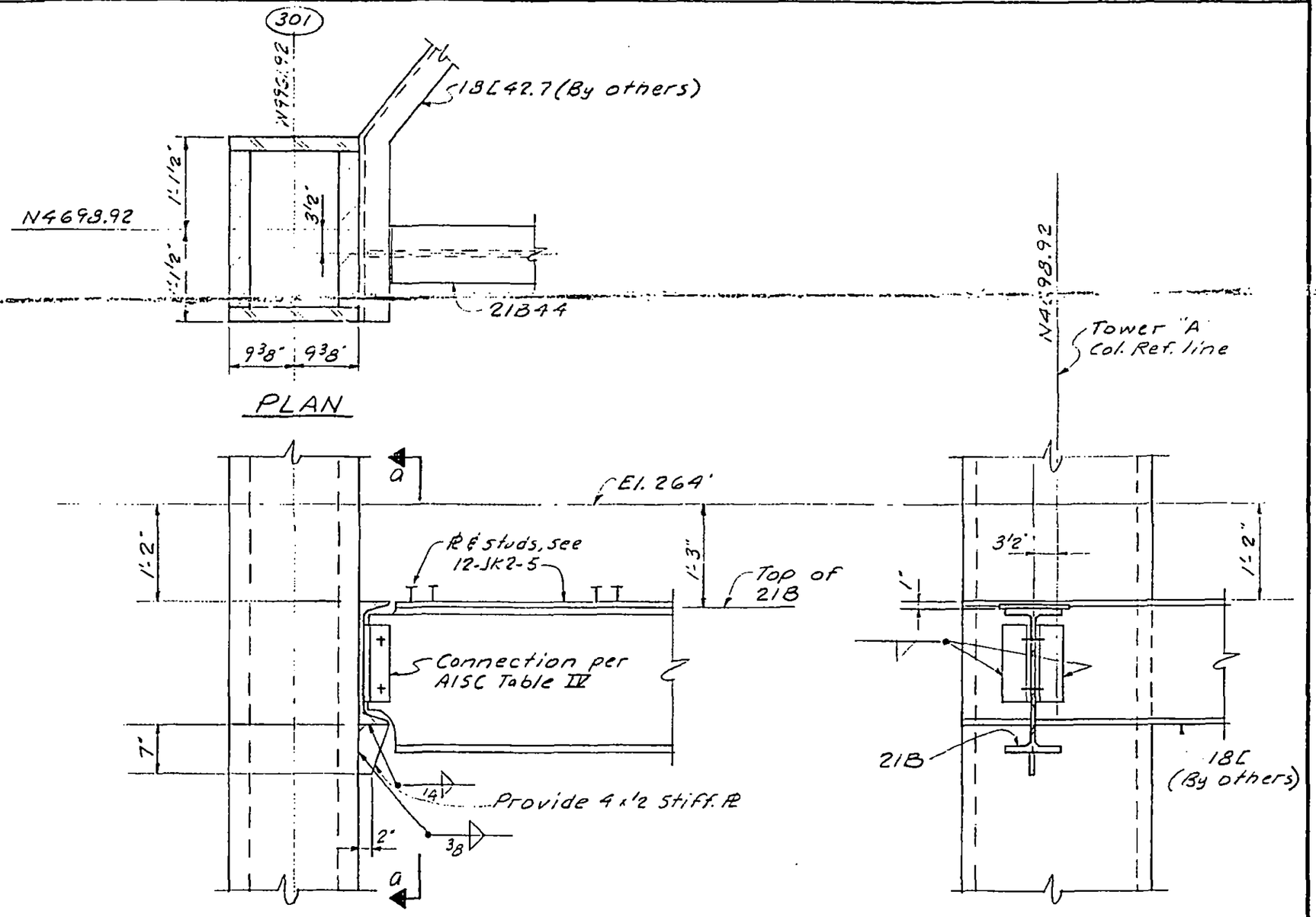

LICENSED PROFESSIONAL ENGINEER — LESLIE E. ROBERTSON — No. 32300 — UNIVERSITY OF THE S...

DESIGNED

DRAWN

REVIEWED

12-JK1-119

SKILLING, HELLE, CHRISTIANSEN, ROBERTSON — Structural & Civil Engineers

PROJECT THE WORLD TRADE CENTER | TITLE BEAM CONNECTION DETAIL TO TOWER 'A' | DATE 11-5-68

REVISIONS

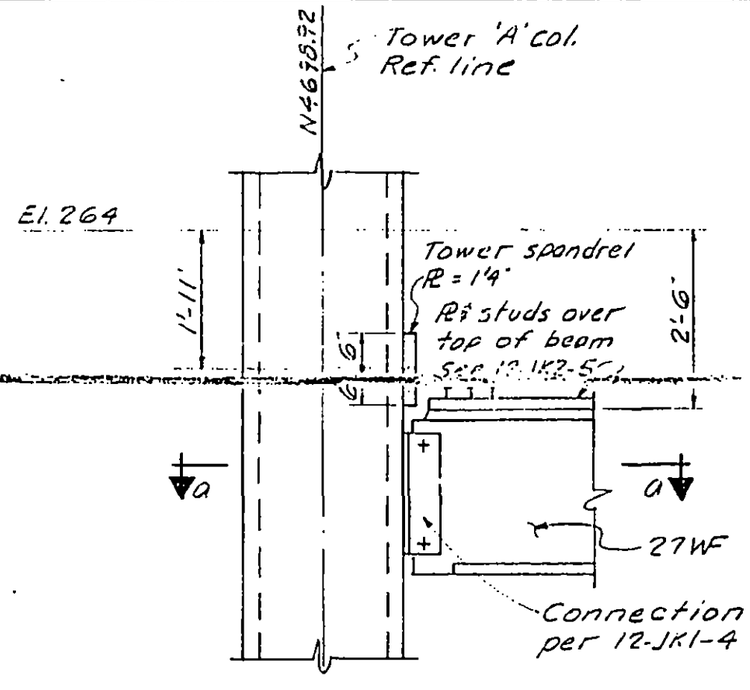

Detail-1

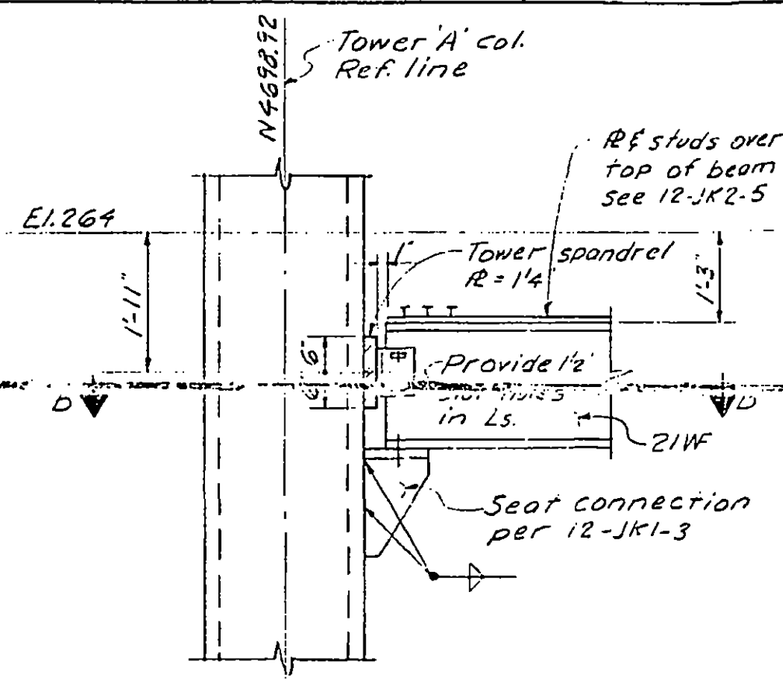

Detail-2

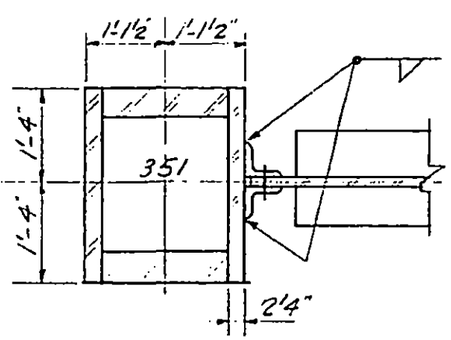

Section a-a

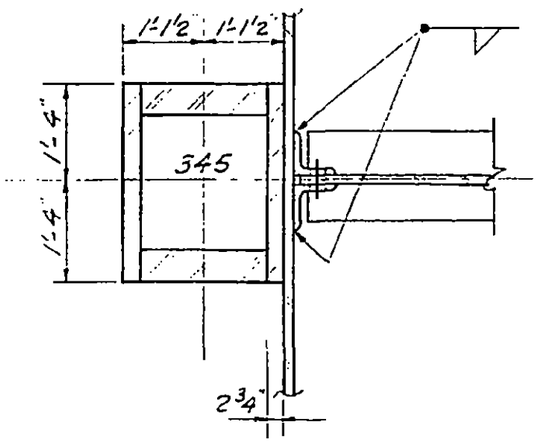

Section b-b

Note:
1. All welds to be E70xx

DESIGNED

DRAWN

REVIEWED

12-JK1-120

SKILLING, HELLE, CHRISTIANSEN, ROBERTSON — Structural & Civil Engineers

PROJECT: THE WORLD TRADE CENTER | TITLE: BEAM CONNECTION TO TOWER 'A' | DATE: 11-27-68

REVISIONS

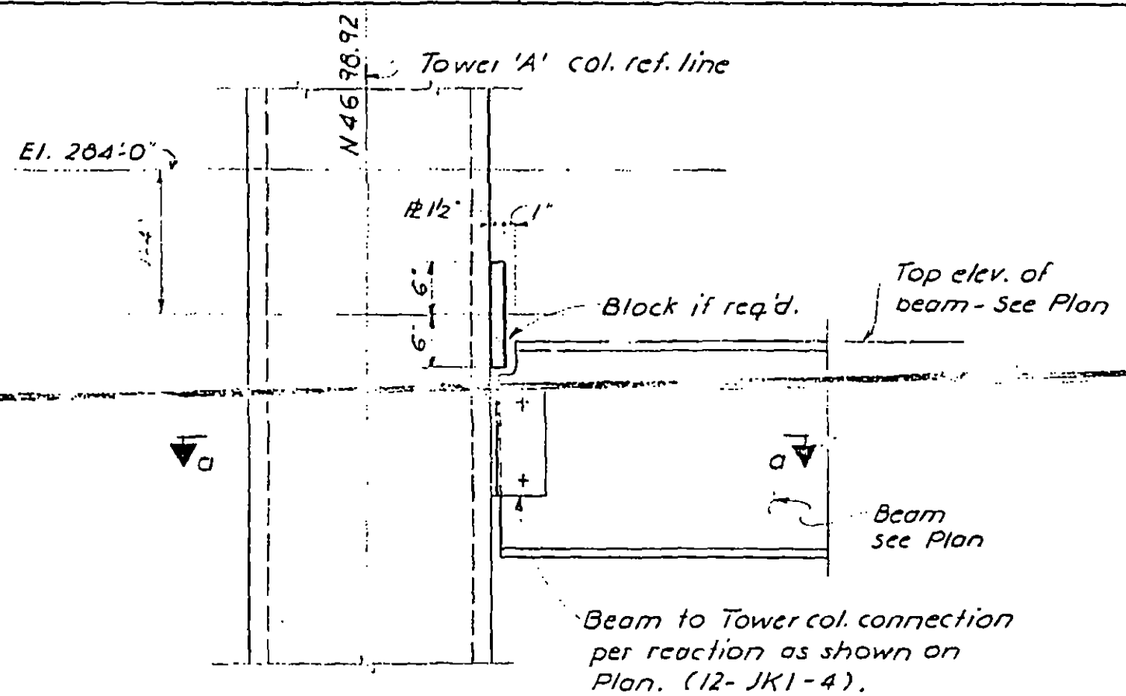

ELEVATION

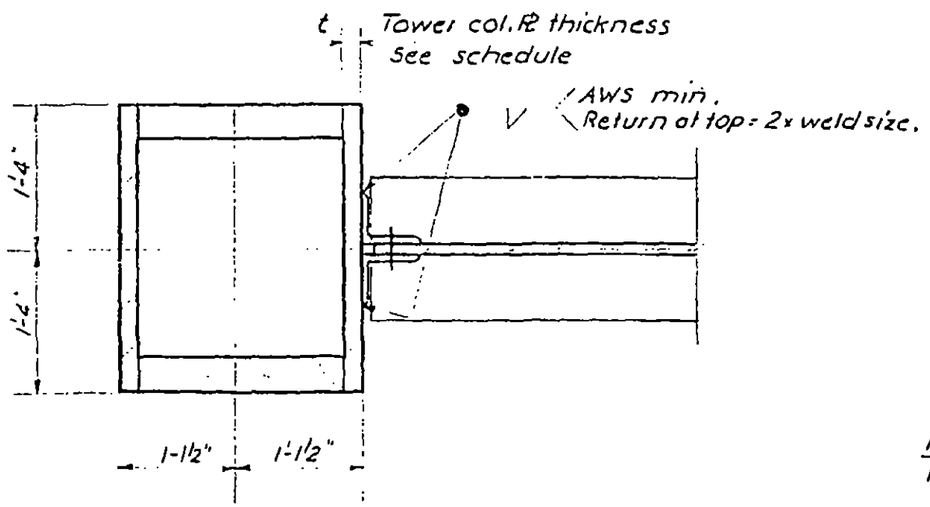

Section a-o

TOWER COLUMN ℄ - THICKNESS	
COL. NO.	t (IN)
303	1½
309	2¼
315	2¾
321	2¾
327	2⅞
333	3
339	3
351	2¼

Notes:
1. All welds to be E70xx.

LICENSED PROFESSIONAL ENGINEER — LESLIE E. ROBERTSON — No. 34360 — UNIVERSITY OF THE STATE OF NEW YORK

DESIGNED

DRAWN

REVIEWED

12-JK1-121

SKILLING, HELLE, CHRISTIANSEN, ROBERTSON — Structural & Civil Engineers

PROJECT: THE WORLD TRADE CENTER | TITLE: BEAM CONNECTION TO TOWER 'A' | DATE: 11-27-68

REVISIONS

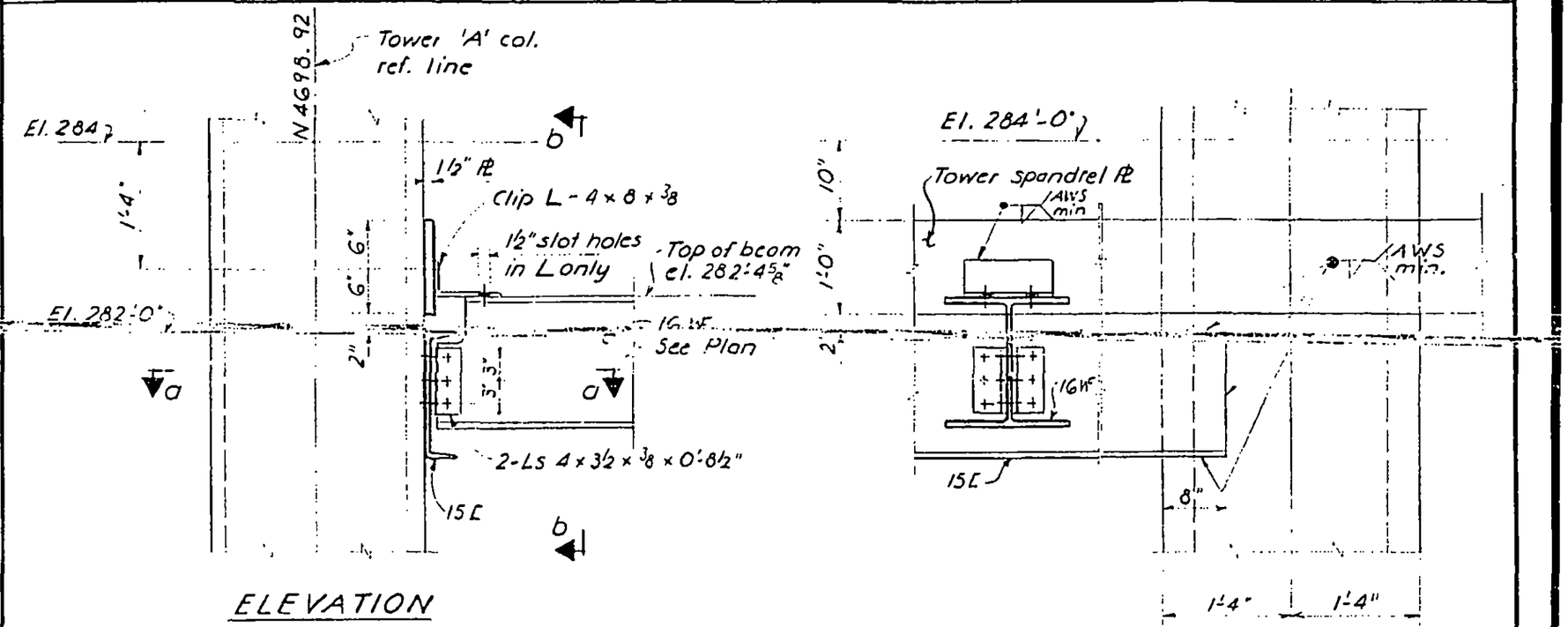

ELEVATION

Section b-b

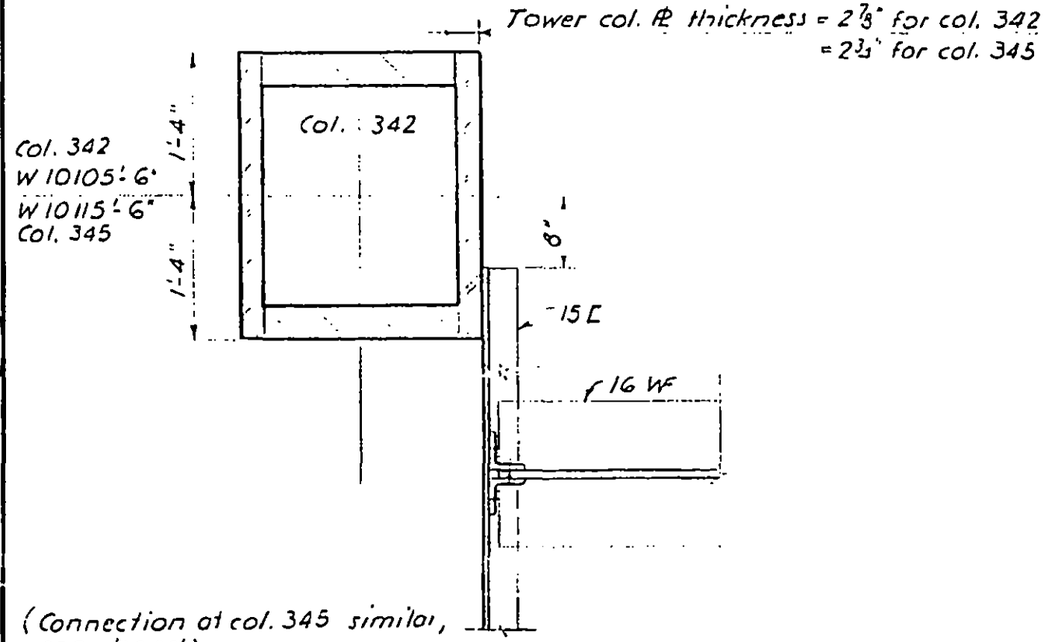

(Connection at col. 345 similar, opp. hand)

Section a-a

Notes:
1. All bolts to be ¾" ϕ H.S. friction type.
2. All welds to be E 70XX.

12-JK1-122

LICENSED PROFESSIONAL ENGINEER — LESLIE E. ROBERTSON — No. 34360 — UNIVERSITY OF THE STATE OF NEW YORK

DRAWN

REVIEWED

SKILLING, HELLE, CHRISTIANSEN, ROBERTSON — Structural & Civil Engineers

PROJECT: THE WORLD TRADE CENTER | TITLE: BEAM CONNECTION DETAIL TO TOWER B | DATE: 9-20-68

REVISIONS

1-3-69

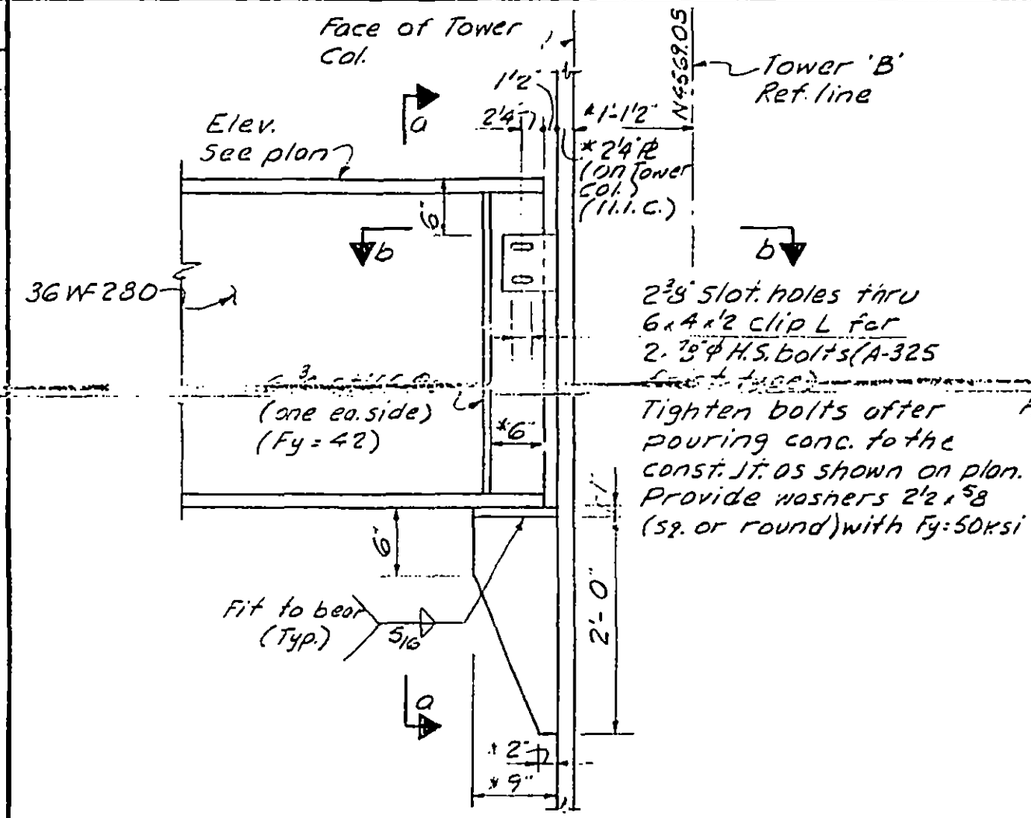

ELEVATION

(All hor. dimensions are measured along ℄ beam passing thru W.P. except as shown with *)

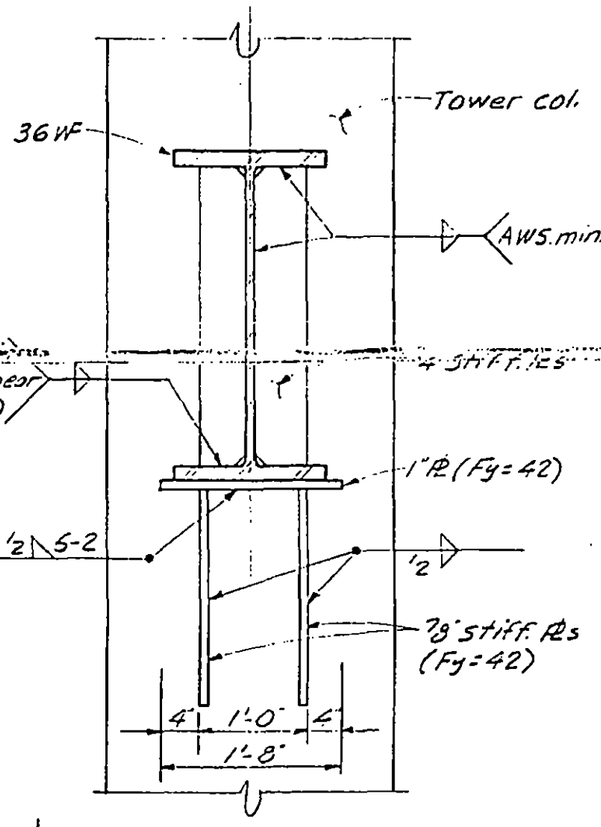

Section a-a

NOTES

1. All welds to be E70xx.

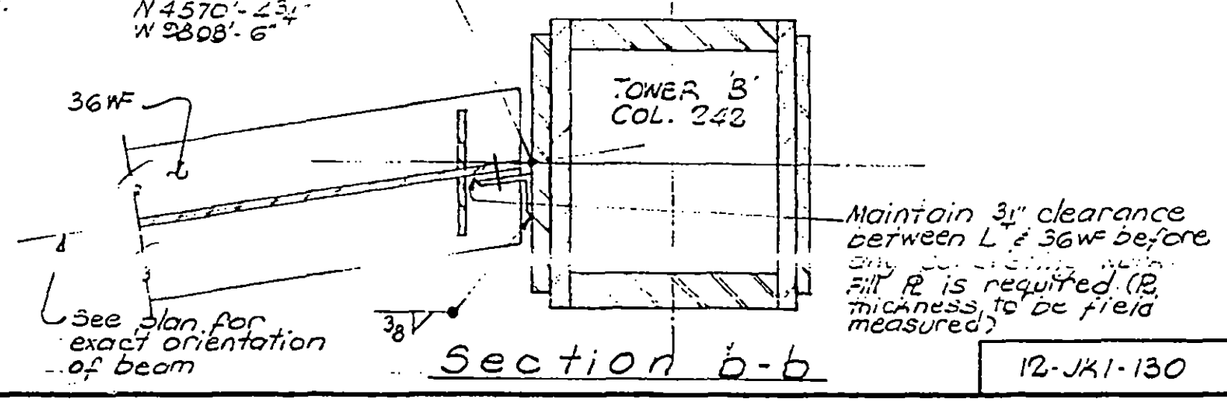

Section b-b

LICENSED PROFESSIONAL ENGINEER — LESLIE E. ROBERTSON — No. 34360 — UNIVERSITY OF THE STATE OF NEW YORK

DESIGNED

DRAWN A.F.

REVIEWED E.L.

12-JK1-130

SKILLING - HELLE - CHRISTIANSEN - ROBERTSON Structural & Civil Engineers

PROJECT THE WORLD TRADE CENTER | TITLE BEAM CONNECTION DETAIL TO W. OF TOWER "B" - B101 THRU B116 | DATE 12-3-68

REVISIONS

3-21-69

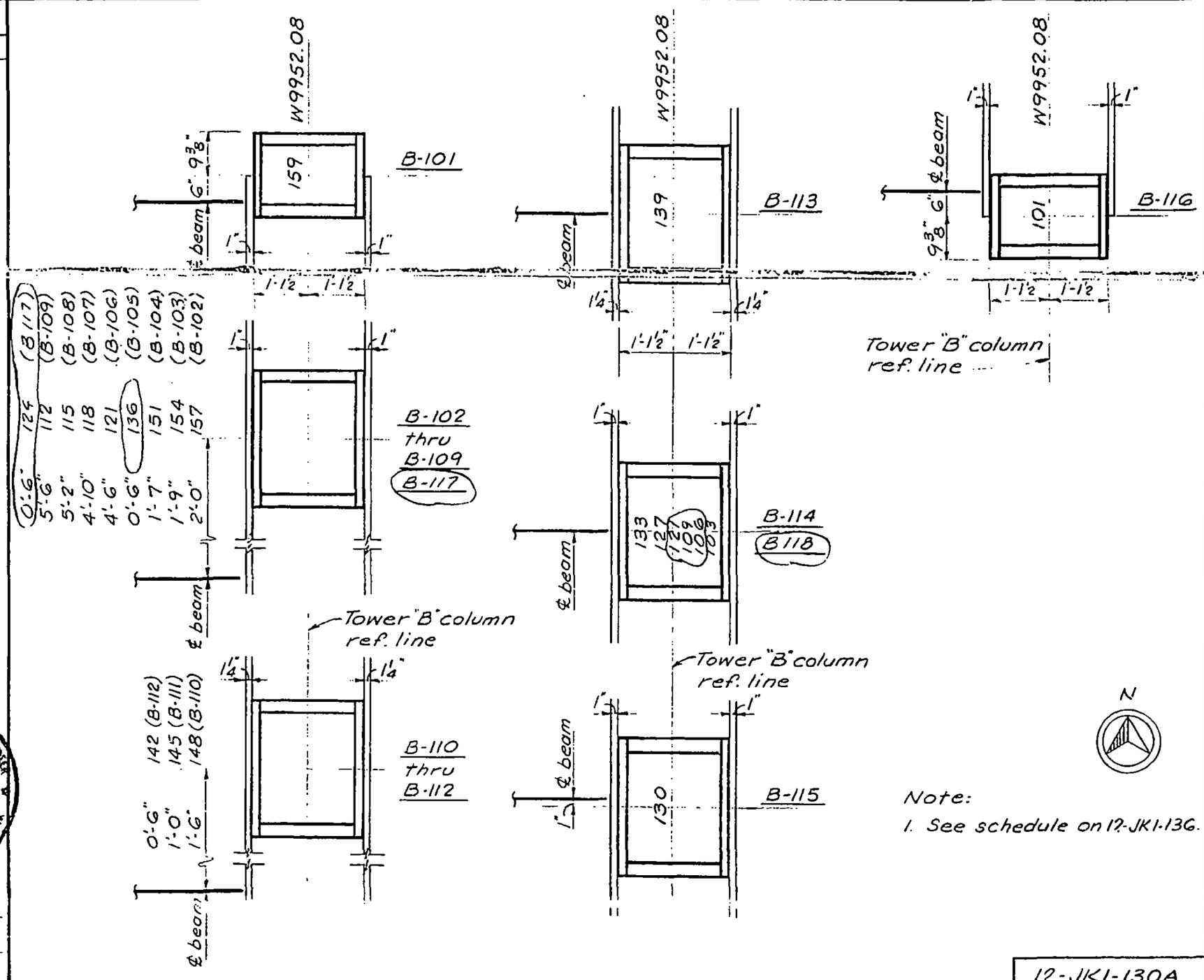

Note:

1. See schedule on 12-JK1-136.

LICENSED PROFESSIONAL ENGINEER
LESLIE E. ROBERTSON
No. 34360
UNIVERSITY OF THE STATE OF NEW YORK

DRAWN S.C.

REVIEWED E.L.

12-JK1-130A

SKILLING - HELLE - CHRISTIANSEN - ROBERTSON Structural & Civil Engineers

PROJECT: THE WORLD TRADE CENTER | TITLE: BEAM CONNECTION DETAIL TO N. OF TOWER 'B' - B-201 Thru B-207 | DATE: 6-7-68

REVISIONS

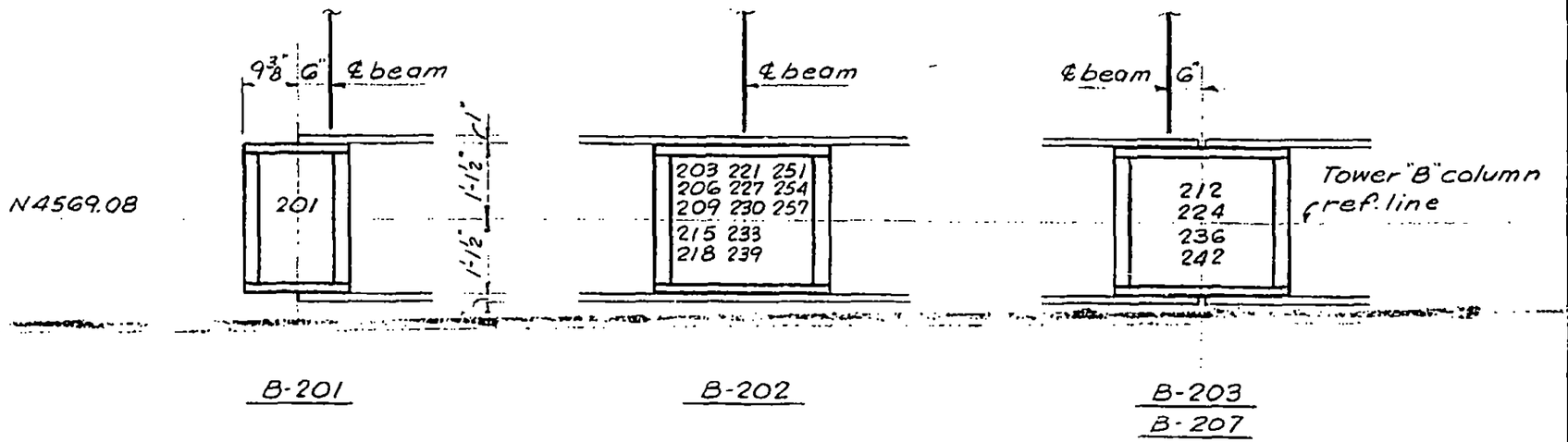

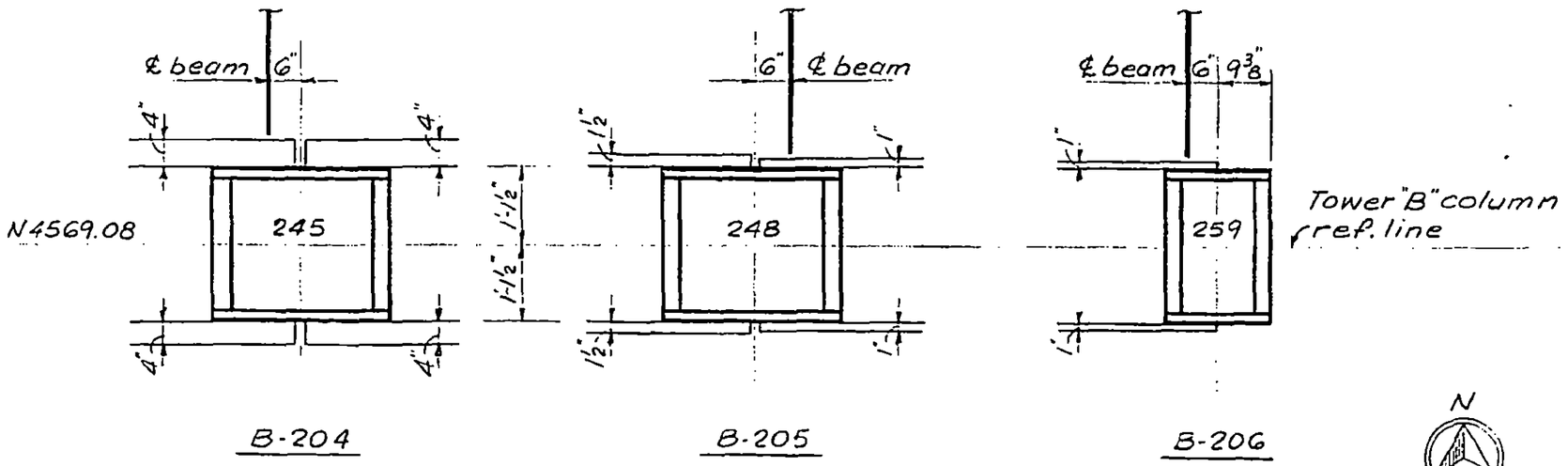

LICENSED PROFESSIONAL ENGINEER
LESLIE E. ROBERTSON
No. 34360
UNIVERSITY OF THE STATE OF NEW YORK

Note:-
1. See schedule on 2-JK1-136

12-JK1-131

SKILLING - HELLE - CHRISTIANSEN - ROBERTSON Structural & Civil Engineers

PROJECT THE WORLD TRADE CENTER | TITLE BEAM CONNECTION DETAIL TO E. OF TOWER 'B' - B-301 THRU B-309 | DATE 12-17-68

REVISIONS

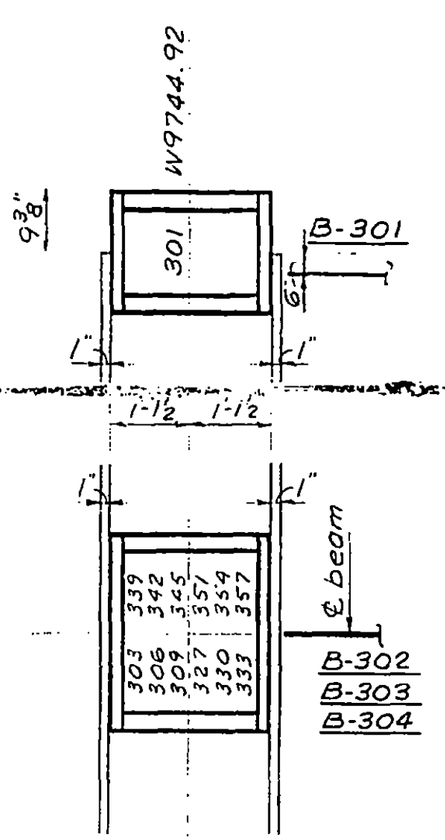

Tower "B" column ref. line

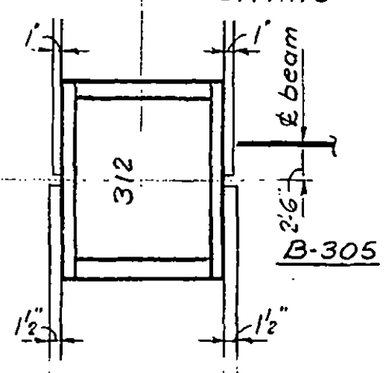

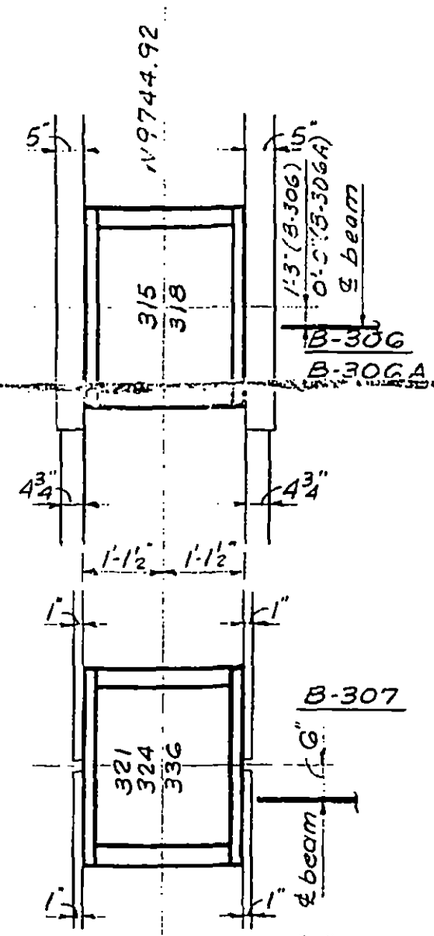

Tower "B" column ref. line

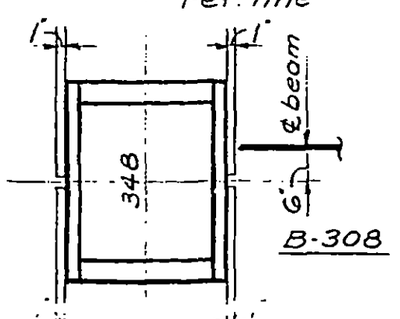

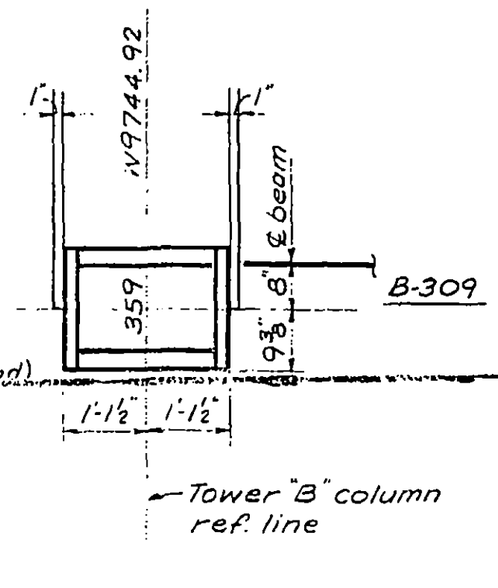

Tower "B" column ref. line

N

Note:
1. See schedule on 12-JK1-137

12-JK1-132

SKILLING - HELLE - CHRISTIANSEN - ROBERTSON Structural & Civil Engineers

PROJECT THE WORLD TRADE CENTER | TITLE BEAM CONNECTION DETAIL TO S. OF TOWER 'B'-B-401 Thru B-409 | DATE 6-11-68

REVISIONS

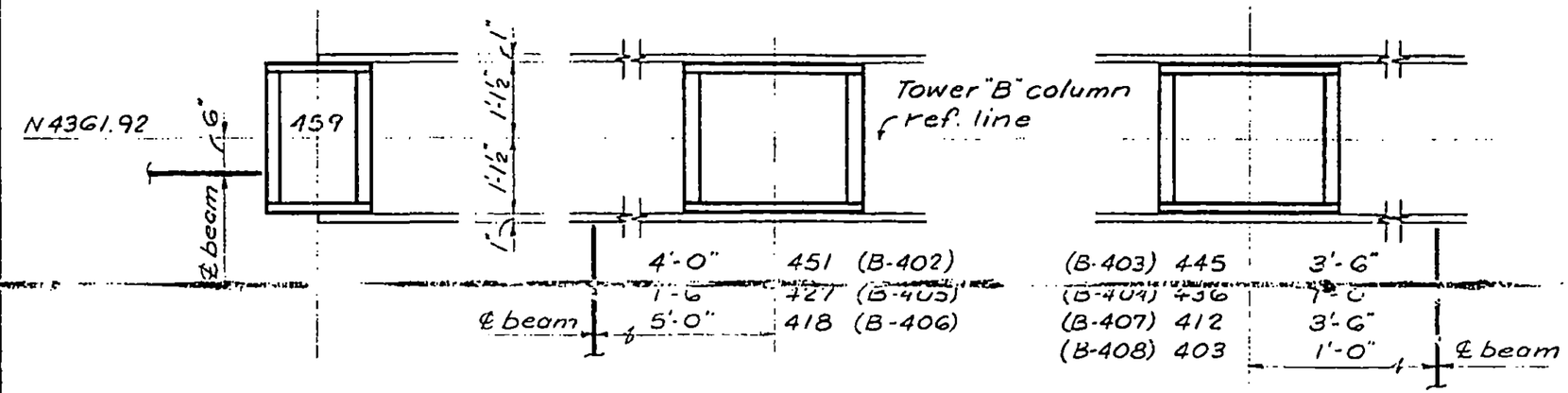

B-401

B-402
B-405
B-406

B-403
B-404
B-407
B-408

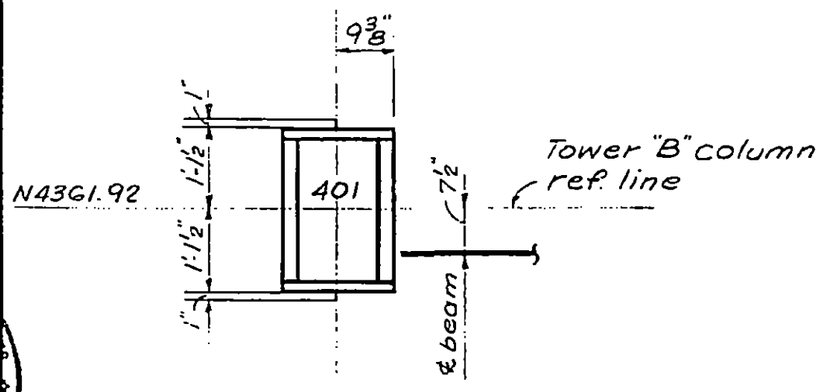

B-409

Note:
1. See schedule on 12-JK1-137

N

LICENSED PROFESSIONAL ENGINEER
LESLIE E. ROBERTSON
No. 34360
UNIVERSITY OF THE STATE OF NEW YORK

12-JK1-133

WTCI-1042-LERA,1

SKILLING - HELLE - CHRISTIANSEN - ROBERTSON Structural & Civil Engineers

PROJECT THE WORLD TRADE CENTER | TITLE BEAM CONNECTION DETAIL TO TOWER - TYPE D | DATE 6-11-68

REVISIONS

2-19-69

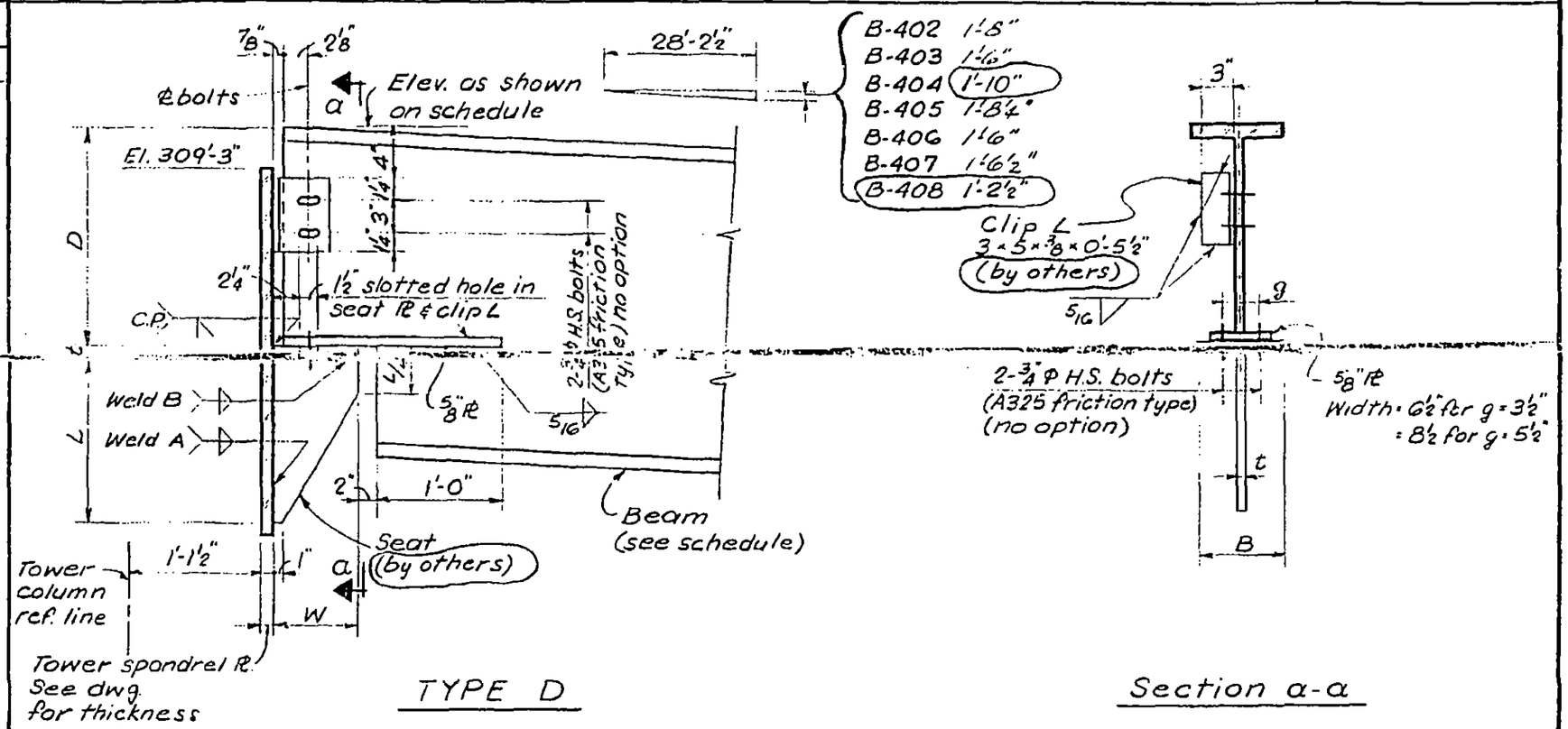

TYPE D

Section a-a

Note:

1. Provide 1 3/4" x 7/16" washers (Fy = 50 k.s.i.) sq. or round.

LICENSED PROFESSIONAL ENGINEER
LESLIE E. ROBERTSON
No. 34360
OF THE STATE OF NEW YORK

DRAWN S.C.

REVIEWED E.L.

12-JK1-135

1042-1, 2

SKILLING - HELLE - CHRISTIANSEN - ROBERTSON Structural & Civil Engineers

PROJECT THE WORLD TRADE CENTER | TITLE SCHEDULE FOR BEAM CONNECTION TO TOWER 'B' | DATE 6-7-68

REVISIONS
12-3-68
2-19-69
3-21-69

DETAIL No.	BEAM			CONNECTION									g
				TYPE	SEAT ℄			STIFFENER ℄			WELD SIZE		
	SIZE	ELEV.	D		W	t	B	W	t	L	A	B	
B-101	16WF36	309'-1"		C	6"	1/2"	6 1/2"	6"	1/2"	12"	5/16"	5/16"	3 1/2"
B-102	↕	↕		C	↕	↕	↕	↕	↕	↕	↕	↕	↕
B-103				C									
B-104				C									
B-105	16WF36			C	6	1/2	6 1/2	6	1/2	12	5/16	5/16	3 1/2
B-106	24WF84		1'-3 7/8"	B	9	3/4	8 1/2	9	3/4	18	1/2	1/2	5 1/2
B-107	16WF36			C	6	1/2	6 1/2	6	1/2	12	5/16	5/16	3 1/2
B-108	16WF36			C	6	1/2	6 1/2	6	1/2	12	5/16	5/16	3 1/2
B-109	30WF190			C	9	1	8 1/2	9	1	22	1/2	1/2	5 1/2
B-110	16WF36			C	6	1/2	6 1/2	6	1/2	12	5/16	5/16	3 1/2
B-111	↕			C	↕	↕	↕	↕	↕	↕	↕	↕	↕
B-112				C									
B-113	↕	309'-1"		C	↕	↕	↕	↕	↕	↕	↕	↕	↕
B-114	16WF36	308'-9"		C	6	1/2	6 1/2	6	1/2	12	5/16	5/16	3 1/2
B-115	24WF84	308'-9"	0'-1 7/8"	B	9	3/4	8 1/2	9	3/4	18	1/2	1/2	5 1/2
B-116	33WF240	308'-1"	1-10"	B	9	1 1/8	8 1/2	9	1 1/8	22 1/2	5/8	1/2	5 1/2
B-117	16WF36	308'-9"	0'-11 7/8"	B	6	1/2	6 1/2	6	1/2	12	5/16	5/16	3 1/2
B-118	16WF36	309'-1"		C	6	1/2	6 1/2	6	1/2	12	5/16	5/16	3 1/2
B-201	21B44	309'-3"	1'-8 5/8"	B	9	3/4	8 1/2	9	3/4	18	1/2	1/2	5 1/2
B-202	16B31	309'-1"		C	6	1/2	6 1/2	6	1/2	12	5/16	5/16	3 1/2
B-203	21B44	↕	1'-3 7/8"	B	↕	↕	↕	↕	↕	↕	↕	↕	↕
B-204	16WF36			C		↕	↕		↕	↕	↕	↕	↕
B-205	16WF36			C		1/2	6 1/2		1/2	12	↕	↕	3 1/2
B-206	16WF78	↕		C	↕	3/4	8 1/2	↕	3/4	14	5/16	5/16	5 1/2
B-207	16WF58	309'-1"		C	6	3/4	8 1/2	6	3/4	14	3/8	3/8	5 1/2

NOTE:-
1. See dwg. 12-JK1-106 for detail of connection.

LICENSED PROFESSIONAL ENGINEER
LESLIE E. ROBERTSON
No. 34360
UNIVERSITY OF THE STATE OF NEW YORK

DRAWN
S.C.
REVIEWED
E.L.

12-JK1-136

SKILLING - HELLE - CHRISTIANSEN - ROBERTSON Structural & Civil Engineers

PROJECT THE WORLD TRADE CENTER | TITLE SCHEDULE FOR BEAM CONNECTION TO TOWER 'B' | DATE 6-11-68

REVISIONS
12-17-68
2-19-69

DETAIL No.	BEAM			CONNECTION										g
				TYPE	SEAT ℄			STIFFENER ℄			WELD SIZE			
	SIZE	ELEV.	D		W	t	B	W	t	L	A	B		
B-301	16WF36	309'-1"		C	6"	1/2"	6 1/2"	6"	1/2"	12"	5/16"	5/16"		3 1/2"
B-302	36WF300	309'-1"	2'-0"	B	8	3/4	8 1/2	8	3/4	18	3/8	3/8		5 1/2
B-303	16WF36	309'-1"		C	6	1/2	6 1/2	6	1/2	12	5/16	5/16		3 1/2
B-304	↑	308'-9"		C	↑	↑	↑	↑	↑	↑	↑	↑		↑
B-305		309'-1"		C										
B-306		↑		C										
B-306A				C										
B-307		↑		C										
B-308	↓	309'-1"		C	↓	↓	↓	↓	↓	↓	↓	↓		↓
B-309	16WF36	308'-9"		C	6	1/2	6 1/2	6	1/2	12	5/16	5/16		3 1/2
B-401	36WF230	308'-1"	2'-2"	B	9	1	8 1/2	9	1	22	1/2	1/2		5 1/2
B-402	36WF260	N. 308'-1" S. 306'-5"	1'-9"	D	↑	1 1/16	↑	↑	1 1/16	24	5/8	5/8		↑
B-403	↑	N. 308'-1" S. 306'-7"	↑	D		↑			↑	↑	↑	↑		
B-404		N. 308'-6" S. 306'-8"		D										
B-405		N. 308'-6" S. 306'-9 3/4"		D										
B-406		N. 308'-6" S. 307'-0"		D										
B-407	↓	N. 308'-9" S. 307'-2 1/2"	↓	D	↓	↓	↓	↓	↓	↓	↓	↓		↓
B-408	36WF260	N. 308'-9" S. 307'-6 1/2"	1'-9"	D	9	1 1/16	8 1/2	9	1 1/16	24	5/8	5/8		5 1/2
B-409	18WF50	308'-9"		C	7	1/2	6 1/2	7	1/2	14	5/16	5/16		3 1/2

NOTES:-

1. N.— Elevation of North end of beam along face of tower spandrel ℄.
   S.— Elevation at South end of beam along line (58).
2. See dwg. 12-JK1-106 & 135 for detail of connection.

LICENSED PROFESSIONAL ENGINEER
LESLIE E. ROBERTSON
No. 34360
UNIVERSITY OF THE STATE OF NEW YORK

S.C.

REVIEWED
E.L.

12-JK1-137

SKILLING, HELLE, CHRISTIANSEN, ROBERTSON — Structural & Civil Engineers

PROJECT: THE WORLD TRADE CENTER | TITLE: BRACKET SUPPORT AT EXT. FACE OF TOWER | DATE: 9-13-68

REVISIONS

	BRACKET SIZE	Fy	LOCATION		ELEV.	WELD 'a'	REMARKS
1	L8x6x1x2'0"	36	WA	N4707'-1"	307'-5"	5/16"	
2				N4712'-6"			
3				N4722'-6"			
4				N4732'-6"			
5				N4741'-3"	307'-5"		
6				N4752'-6"	307'-11"		
7				N4762'-6"			
9				N4792'-6"			
10				N4802'-6"			
11				N4812'-6"			
12				N4821'-3"	307'-11"		
13				N4832'-6"	308'-1"		
14				N4842'-6"			
15				N4852'-6"			
16				N4863'-9"			
17				N4872'-6"	308'-1"		
18	L8x6x1x2'0"	36	WA	N4892'-6"	308'-3"	5/16"	

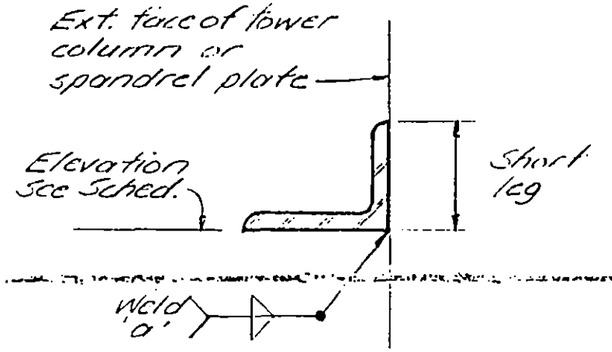

Sect. a-a

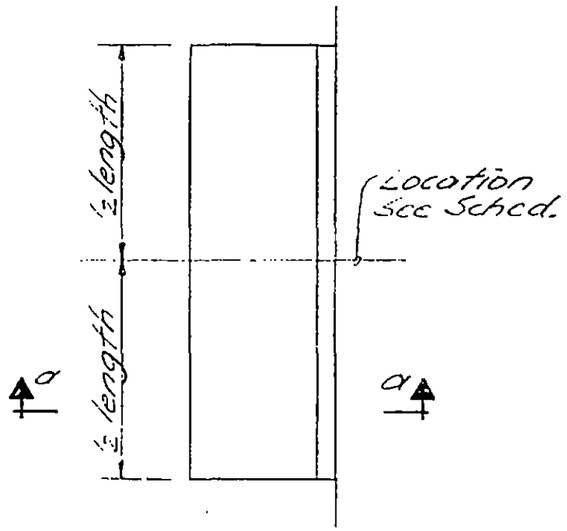

PLAN

NOTES:
1. All welding to be E70XX.
2. * — Longer leg of L vertical.
3. Notations:
   N - North face of tower — A - Tower 'A'
   S - South " " " — B - Tower 'B'
   E - East " " "
   W - West " " "
   Example: WA means West face of Tower A

LICENSED PROFESSIONAL ENGINEER
LESLIE E. ROBERTSON
No. 34360
UNIVERSITY OF THE STATE OF NEW YORK

DESIGNED

DRAWN

REVIEWED

12-JK1-138

SKILLING, HELLE, CHRISTIANSEN, ROBERTSON — Structural & Civil Engineers

PROJECT THE WORLD TRADE CENTER | TITLE BEAM CONNECTION TO TOWER 'B' | DATE 12-3-68

REVISIONS

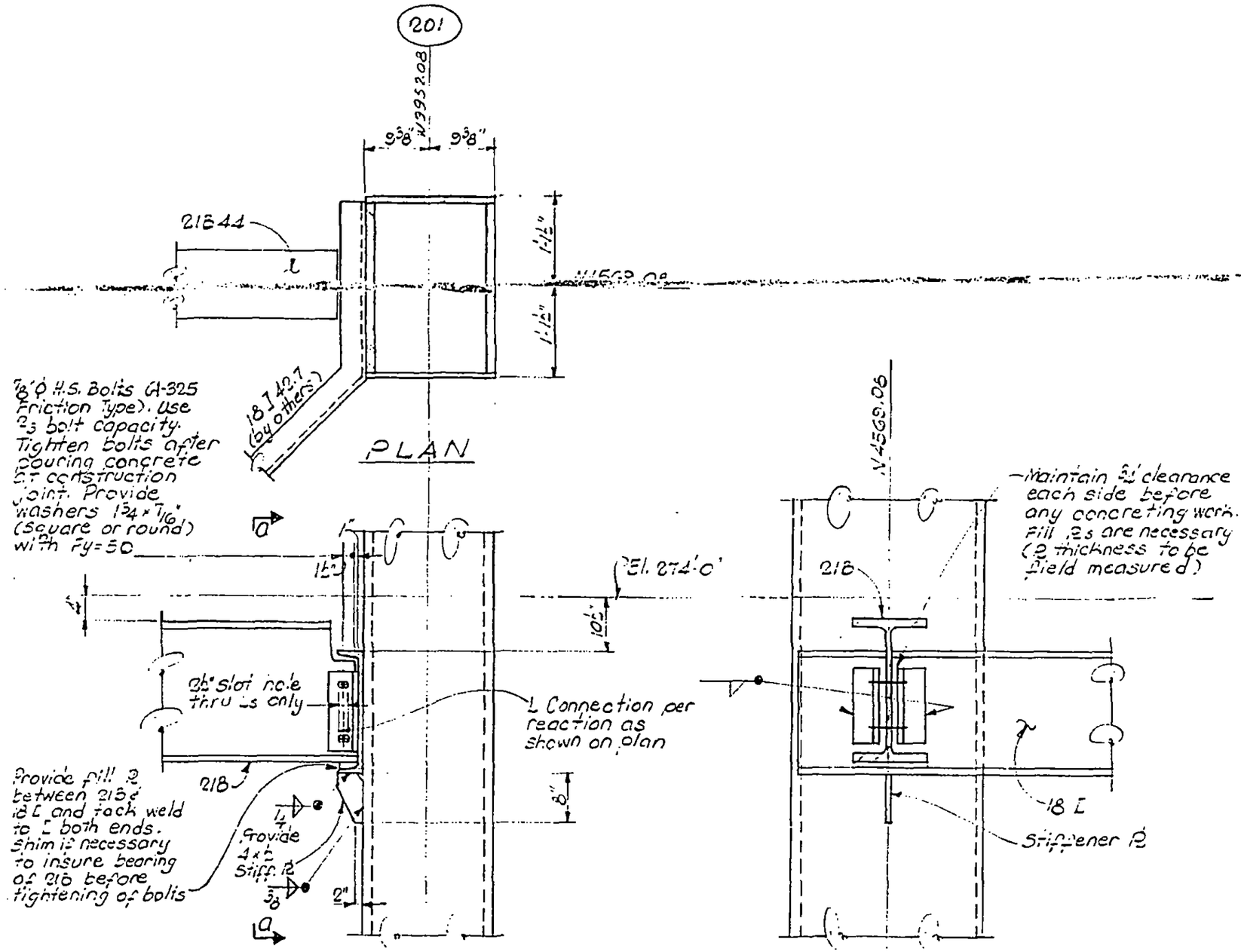

LICENSED PROFESSIONAL ENGINEER — LESLIE E. ROBERTSON — No. 34360 — UNIVERSITY OF THE STATE OF NEW YORK

DESIGNED

DRAWN

REVIEWED

12-JK1-139

SKILLING, HELLE, CHRISTIANSEN, ROBERTSON Structural & Civil Engineers

PROJECT THE WORLD TRADE CENTER | TITLE BRACKET DETAIL | DATE 10-15-68

REVISIONS

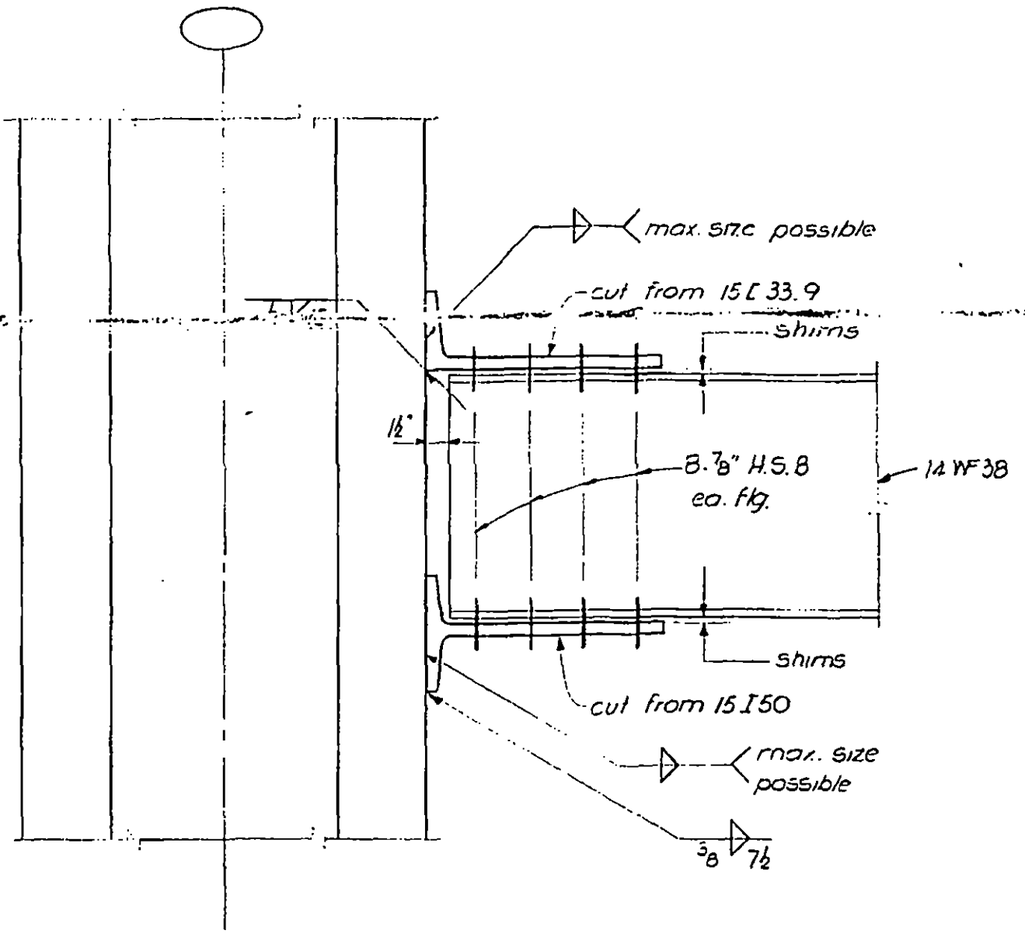

LICENSED PROFESSIONAL ENGINEER
LESLIE E. ROBERTSON

DESIGNED

DRAWN
G.H.

REVIEWED

12-JK1-170

SKILLING, HELLE, CHRISTIANSEN, ROBERTSON — Structural & Civil Engineers

PROJECT THE WORLD TRADE CENTER | TITLE BRACKET DETAIL | DATE 10-15-68

REVISIONS

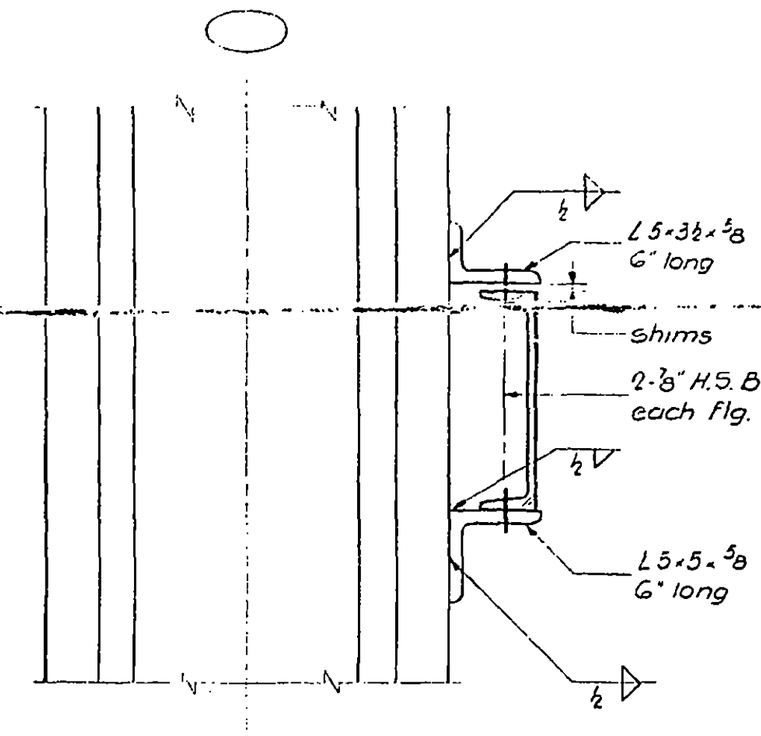

Detail A

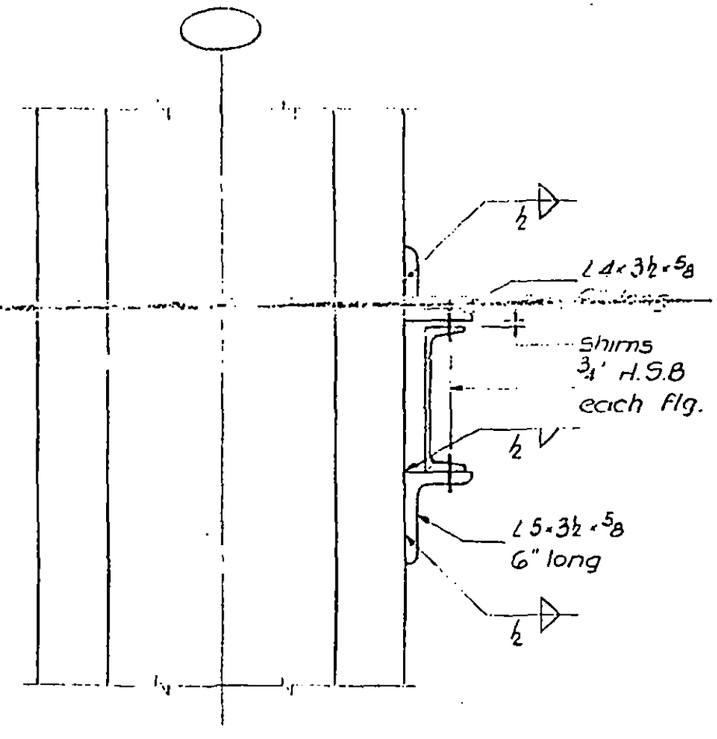

Detail B

LICENSED PROFESSIONAL ENGINEER
LESLIE E. ROBERTSON
No. 34360
UNIVERSITY OF THE STATE OF NEW YORK

DESIGNED

DRAWN
G.H

REVIEWED

12-JK1-171

SKILLING, HELLE, CHRISTIANSEN, ROBERTSON — Structural & Civil Engineers

PROJECT THE WORLD TRADE CENTER | TITLE BRACKET DETAIL | DATE 10-15-68

REVISIONS

5-29-69

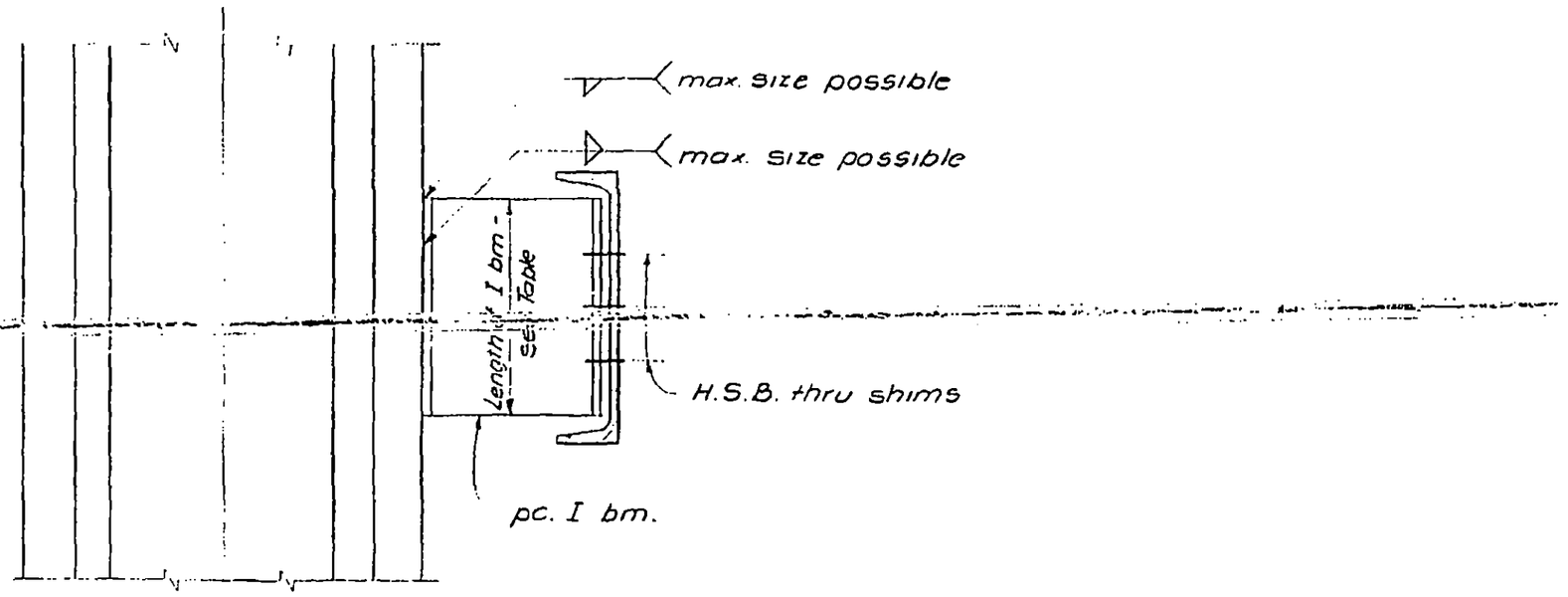

COL.	SIZE OF BRACKET	LENGTH OF BRACKET	NO. & SIZE OF H.S. BOLTS
K35-6	10 I 35	1'-0"	8-$\frac{3}{4}$" ϕ
K37-5	10 I 35	0'-10"	6-$\frac{3}{4}$" ϕ
K37-7	12 I 50	0'-10"	6-$\frac{3}{4}$" ϕ

LICENSED PROFESSIONAL ENGINEER LESLIE E. ROBERTSON No. 34360 UNIVERSITY OF THE STATE OF NEW YORK

DESIGNED

DRAWN G.H.

REVIEWED E.L.

12-JK1-172

WORTHINGTON, SKILLING, HELLE & JACKSON — Civil & Structural Engineers

PROJECT: THE WORLD TRADE CENTER | TITLE: TYPICAL BEAM DETAILS | DATE: 5-15-67

REVISIONS
10-20-67
6-7-68
7-19-68

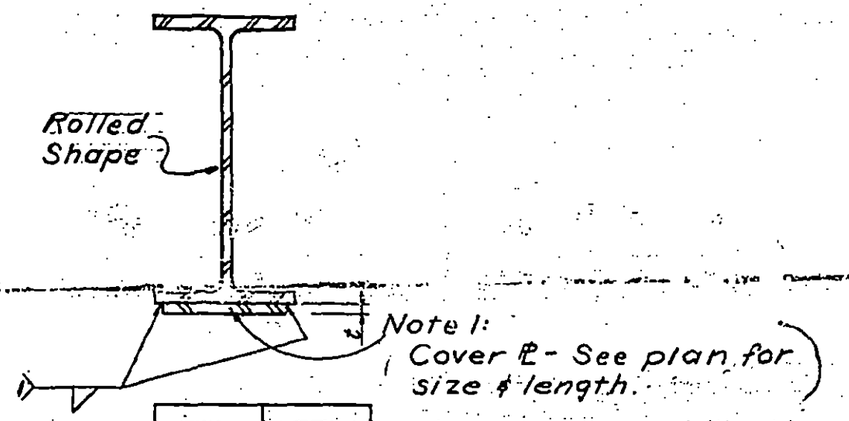

"t"	Weld 1
3/8	1/4
7/16	1/4
1/2	1/4
9/16	5/16
5/8	5/16
11/16	5/16
3/4	5/16
13/16	5/16
7/8	5/16
15/16	5/16
1	5/16
1 1/4	3/8
1 1/2	3/8
1 3/4	3/8
2	1/2

TYPE 2

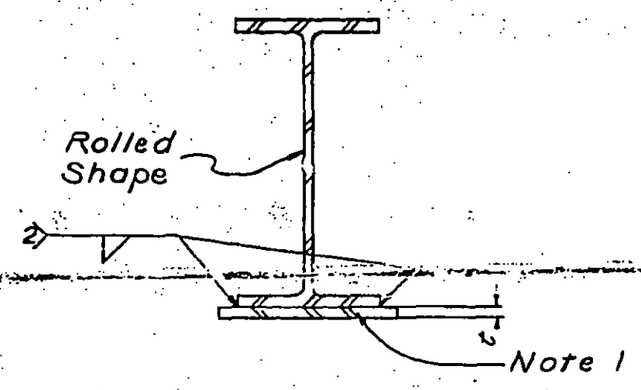

"t"	Weld 2
3/8	1/4
7/16	1/4
1/2	1/4
9/16	5/16
5/8	5/16
11/16	5/16
3/4	5/16
13/16	5/16
7/8	5/16
15/16	5/16
1	5/16
1 1/4	3/8
1 1/2	3/8
1 3/4	3/8
2	1/2

TYPE 3

Notes:
1. Where 2 cover Pls are used, thicker Pl to be welded to Rolled Shape. Use "t" of thicker Pl to figure weld size BTW. Pls (but not greater than thickness of thinner Pl)

LICENSED PROFESSIONAL ENGINEER
LESLIE E. ROBERTSON
No. 34360
UNIVERSITY OF THE STATE OF NEW YORK

12-JK2-2

WORTHINGTON, SKILLING, HELLE & JACKSON — Civil & Structural Engineers

PROJECT: TYPICAL TRADE CENTER | TITLE: TYPICAL BEAM DETAIL | DATE: 5-15-67

REVISIONS

10-20-67

7-19-68

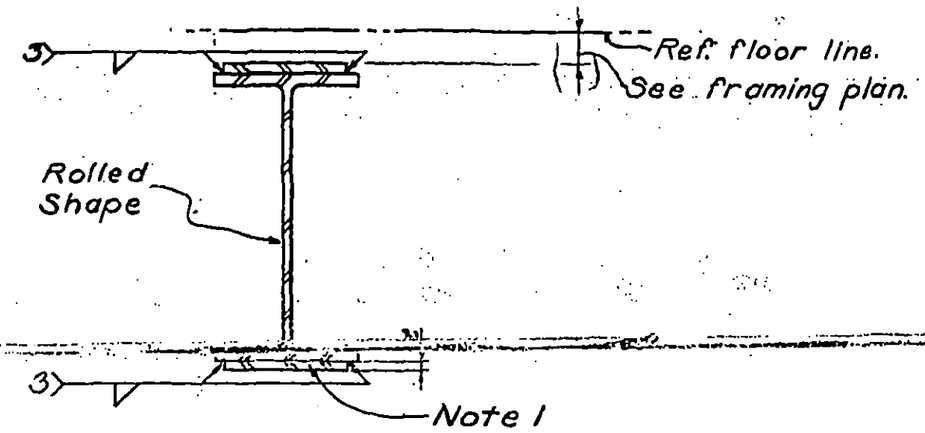

"t"	Weld 3
3/8	1/4
7/16	1/4
1/2	1/4
9/16	5/16
5/8	5/16
11/16	5/16
3/4	5/16
13/16	5/16
7/8	5/16
15/16	5/16
1	5/16
1 1/4	3/8
1 1/2	3/8
1 3/4	3/8
2	1/2

TYPE 4

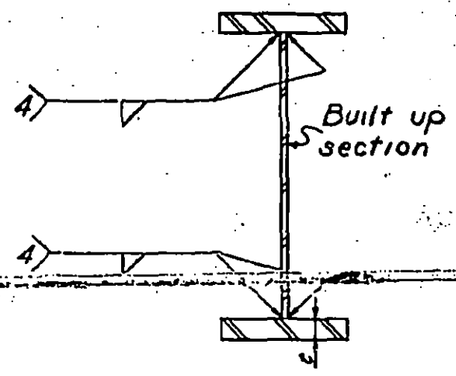

"t"	Weld 4
3/4	1/4
7/8	5/16
1	5/16
1 1/8	5/16
1 1/4	5/16
1 3/8	5/16
1 1/2	5/16
1 5/8	3/8
1 3/4	3/8
1 7/8	3/8
2	3/8
2 1/4	3/8
2 1/2	1/2
2 3/4	1/2
3	1/2
3 1/4	1/2
3 1/2 or over	1/2

TYPE 5

Notes:
1. Where 2 cover Pls are used, thicker Pl to be welded to Rolled Shape. Use "t" of thicker Pl to figure weld size BTH. Pls (but not greater than thickness of thinner Pl)

LICENSED PROFESSIONAL ENGINEER
LESLIE E. ROBERTSON
No. 34360
UNIVERSITY OF THE STATE OF NEW YORK

12-JK2-3

WORTHINGTON, SKILLING, HELLE & JACKSON — Civil & Structural Engineers

PROJECT: THE WORLD TRADE CENTER | TITLE: TYPICAL BEAM DETAILS | DATE: 5-15-67

REVISIONS

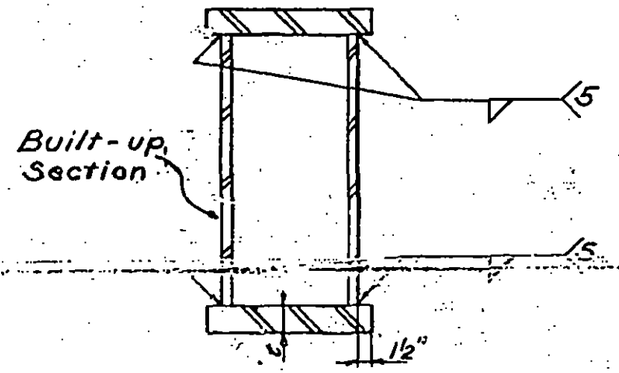

TYPE 6.

"t"	WELD 5
¾	¼
⅞	5/16
1	5/16
1⅛	5/16
1¼	5/16
1⅜	5/16
1½	5/16
1⅝	⅜
1¾	⅜
1⅞	⅜
2	⅜
2¼	⅜
2½	½
2¾	½
3	½
3¼	½
3½ or over	½

LICENSED PROFESSIONAL ENGINEER LESLIE E. ROBERTSON No. 34360 UNIVERSITY OF THE STATE OF NEW YORK

12-JK2-4

SKILLING - HELLE - CHRISTIANSEN - ROBERTSON Structural & Civil Enginoors

PROJECT THE WORLD TRADE CENTER | TITLE TYPICAL BEAM DETAILS | DATE 5-15-67

REVISIONS

6-5-67

11-8-67
Gen. revisions

7-19-68

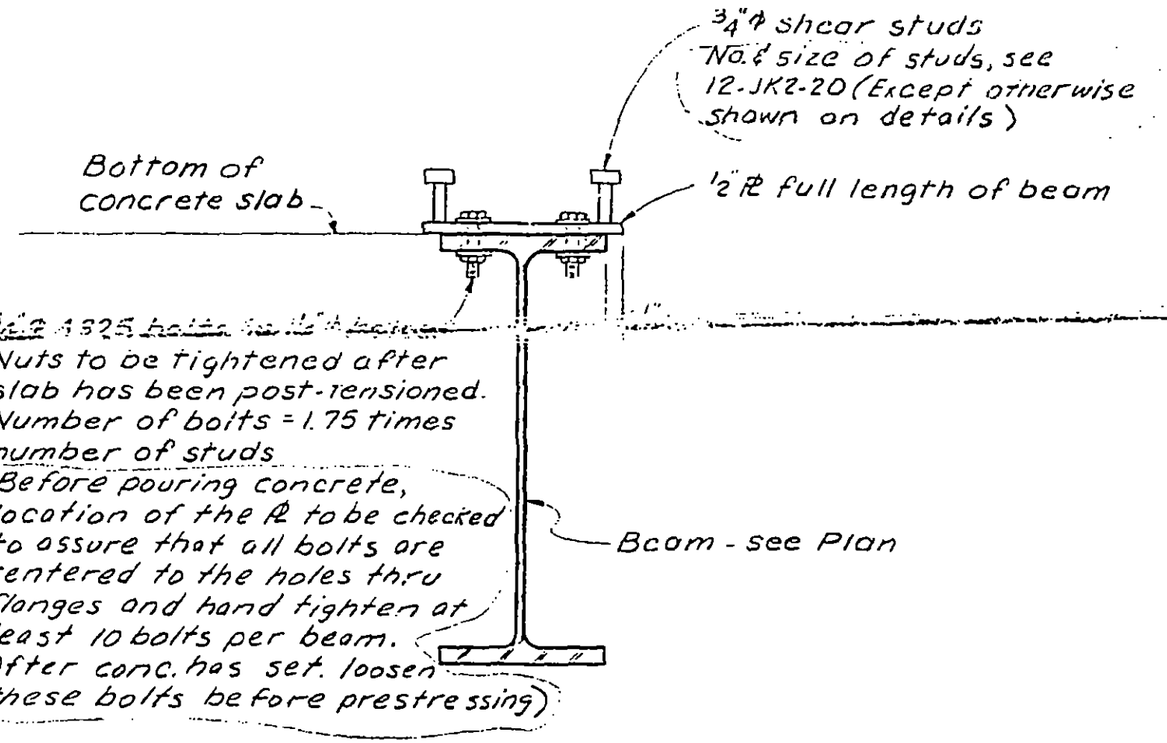

TYPE 7 (Typical all beams at El 264' except otherwise shown on details)

NOTE:
All shear studs shall be installed on 1/2" ℄ only.
All washers provided should be 1 3/4 × 7/16 (square or round) with a yield stress of 50 ksi.

12-JK2-5

SKILLING, HELLE, CHRISTIANSEN, ROBERTSON — Structural & Civil Engineers

PROJECT THE WORLD TRADE CENTER | TITLE | DATE 7-19-68

REVISIONS

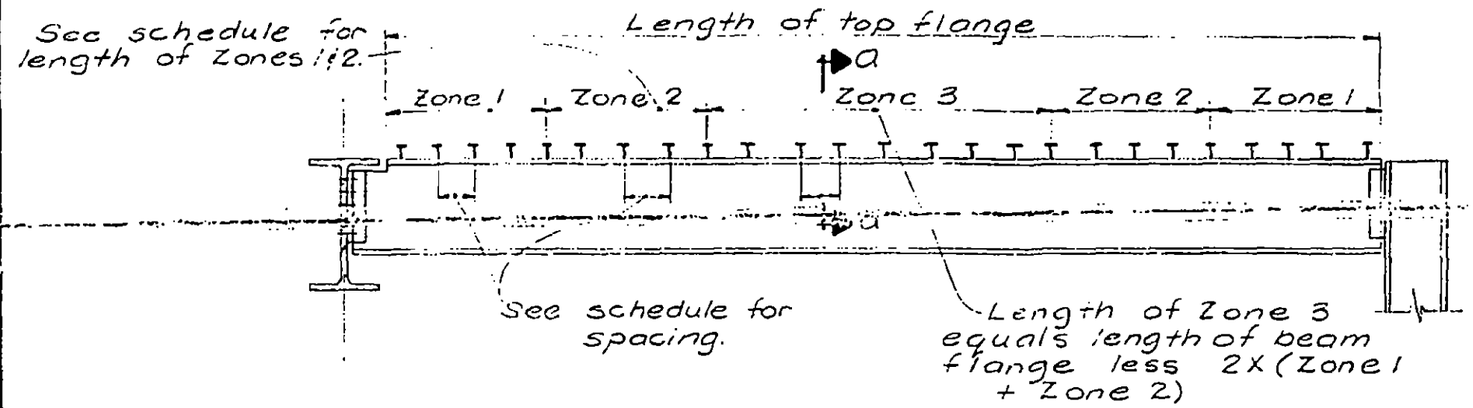

ELEVATION

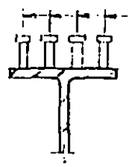

See schedule for stud size & number of rows (See Dwg. 12-JK2-20 for notes)

SECTION a-a

Notes:

1. Length of beam may be such that Zone 3 does not exist and Zones 2 overlap.

LICENSED PROFESSIONAL ENGINEER — LESLIE E. ROBERTSON — No. 34360 — LICENSED IN THE STATE OF NEW YORK

DESIGNED

DRAWN

REVIEWED

12-JK2-8

SKILLING, HELLE, CHRISTIANSEN, ROBERTSON — Structural & Civil Engineers

PROJECT THE WORLD TRADE CENTER | TITLE SCHEDULE FOR SHEAR CONNECTORS | DATE 7-19-68

REVISIONS

Schedule "A"

Beam No.	Stud Size	No. Of Rows		Zone 1	Zone 2	Zone 3
1	$\frac{3}{4}\phi \times 3"$	4	Length	4'-0"	4'-0"	
			Spacing	$3\frac{3}{4}$"	$3\frac{3}{4}$"	$4\frac{5}{8}$"
2	$\frac{3}{4}\phi \times 3"$	2	Length	4'-0"	4'-0"	
			Spacing	3¼"	3¼"	4"
3	$\frac{7}{8}\phi \times 3\frac{1}{2}"$	2	Length	4'-0"	4'-0"	
			Spacing	3"	4¼"	$5\frac{3}{4}$"
4	$\frac{7}{8}\phi \times 3\frac{1}{2}"$	2	Length	4'-0"	4'-0"	
			Spacing	3"	4¼"	5¾"
5	$\frac{7}{8}\phi \times 3\frac{1}{2}"$	4	Length	5'-0"	5'-0"	
			Spacing	3¼"	$3\frac{3}{4}$"	$7\frac{3}{4}$"
6	$\frac{7}{8}\phi \times 3\frac{1}{2}"$	2	Length	5'-0"	5'-0"	
			Spacing	3"	4¼"	8¼"
7	$\frac{7}{8}\phi \times 3\frac{1}{2}"$	4	Length	5'-0"	5'-0"	
			Spacing	4"	$4\frac{3}{4}$"	6"
8	$\frac{7}{8}\phi \times 3\frac{1}{2}"$	2	Length	5'-0"	5'-0"	
			Spacing	3½"	4½"	5½"
9	$\frac{7}{8}\phi \times 3\frac{1}{2}"$	4 & 2	Length	4'-0"	4'-0"	
			Spacing	4@4"	2@4¼"	2@5½"
10	$\frac{7}{8}\phi \times 3\frac{1}{2}"$	2	Length			
			Spacing	9"	9"	9"
11	$\frac{7}{8}\phi \times 3\frac{1}{2}"$	2	Length	6'-0"	6'-0"	
			Spacing	5"	6"	8"
12	$\frac{7}{8}\phi \times 3\frac{1}{2}"$	2	Length			
			Spacing	5½"	5½"	5½"
13	$\frac{7}{8}\phi \times 3\frac{1}{2}"$	2	Length	5'-0"	3'-0"	
			Spacing	3¼"	5"	6½"
14	$\frac{7}{8}\phi \times 3\frac{1}{2}"$	2	Length	5'-0"	5'-0"	
			Spacing	3"	5"	5"
15	$\frac{7}{8}\phi \times 3\frac{1}{2}"$	2	Length	6'-0"	6'-0"	
			Spacing	$3\frac{3}{4}$"	4½"	7¼"
16	$\frac{7}{8}\phi \times 3\frac{1}{2}"$	2	Length	6'-0"	6'-0"	
			Spacing	4"	$4\frac{3}{4}$"	8"
			Length	6'-0"	6'-0"	

Schedule "A"

Beam No.	Stud Size	No. Of Rows		Zone 1	Zone 2	Zone 3
19	$\frac{7}{8}\phi \times 3\frac{1}{2}"$	2	Length	6'-0"	6'-0"	
			Spacing	$3\frac{3}{4}$"	4¼"	8¼"
20	$\frac{7}{8}\phi \times 3\frac{1}{2}"$	2	Length	6'-0"	6'-0"	
			Spacing	4¼"	5½"	11"
21	$\frac{7}{8}\phi \times 3\frac{1}{2}"$	2	Length	6'-0"	6'-0"	
			Spacing	$6\frac{3}{4}$"	$6\frac{3}{4}$"	8"
22	$\frac{7}{8}\phi \times 3\frac{1}{2}"$	2	Length	6'-0"	6'-0"	
			Spacing	4"	5¼"	7½"
23	$\frac{7}{8}\phi \times 3\frac{1}{2}"$	2	Length	6'-0"	6'-0"	
			Spacing	4½"	5¼"	9½"
24	$\frac{7}{8}\phi \times 3\frac{1}{2}"$	2	Length	6'-0"	6'-0"	
			Spacing	4½"	$5\frac{3}{4}$"	11½"
25	$\frac{7}{8}\phi \times 3\frac{1}{2}"$	2	Length	6'-0"	6'-0"	
			Spacing	4½"	6¼"	10"
26	$\frac{7}{8}\phi \times 3\frac{1}{2}"$	2	Length	6'-0"	6'-0"	
			Spacing	3½"	$4\frac{3}{4}$"	7¼"
27	$\frac{7}{8}\phi \times 3\frac{1}{2}"$	2	Length	4'-0"	4'-0"	
			Spacing	$3\frac{3}{4}$"	5"	$6\frac{3}{4}$"
28	$\frac{7}{8}\phi \times 3\frac{1}{2}"$	2	Length	4'-0"	4'-0"	
			Spacing	3½"	4½"	6"
29	$\frac{7}{8}\phi \times 3\frac{1}{2}"$	2	Length	4'-0"	4'-0"	
			Spacing	4¼"	5½"	7½"
30	$\frac{7}{8}\phi \times 3\frac{1}{2}"$	2	Length	4'-0"	4'-0"	
			Spacing	4½"	$5\frac{3}{4}$"	$7\frac{3}{4}$"
31	$\frac{7}{8}\phi \times 3\frac{1}{2}"$	2	Length	4'-0"	4'-0"	
			Spacing	$3\frac{3}{4}$"	$4\frac{3}{4}$"	6"
32	$\frac{7}{8}\phi \times 3\frac{1}{2}"$	3	Length	4'-0"		
			Spacing	3½"	5½"	5½"
33	$\frac{7}{8}\phi \times 3\frac{1}{2}"$	2	Length	4'-0"		
			Spacing	3¼"	5¼"	5½"

Note:

LICENSED PROFESSIONAL ENGINEER ★ LESLIE E. ROBERTSON ★ No. 34360 ★ UNIVERSITY OF THE STATE OF NEW YORK

DESIGNED

SKILLING, HELLE, CHRISTIANSEN, ROBERTSON — Structural & Civil Engineers

PROJECT THE WORLD TRADE CENTER | TITLE SCHEDULE FOR SHEAR CONNECTORS | DATE 7-19-68

REVISIONS

Schedule "A"

Beam No.	Stud Size	No. Of Rows		Zone 1	Zone 2	Zone 3
34	7/8"φ×3½"	2	Length	4'-0"		
			Spacing	3¼"	5"	5"
35	7/8"φ×3½"	3	Length	4'-0"		
			Spacing	3½"	6"	6"
36	7/8"φ×3½"	2	Length	4'-0"		
			Spacing	3¼"	5½"	5½"
37	7/8"φ×3½"	2	Length			
			Spacing	3¼"	5½"	5½"
38	7/8"φ×3½"	3	Length	4'-0"		
			Spacing	3½"	5¾"	5¾"
39	7/8"φ×3½"	2	Length	6'-0"	6'-0"	
			Spacing	5"	7¼"	11"
40	7/8"φ×3½"	3	Length			
			Spacing	3"	3"	3"
41	7/8"φ×3½"	2	Length	5'-0"	5'-0"	
			Spacing	3"	4"	7"
42	7/8"φ×3½"	3	Length	5'-0"	5'-0"	
			Spacing	3¼"	4¼"	6"
43	7/8"φ×3½"	2	Length			
			Spacing	5"	5"	5"
44	7/8"φ×3½"	2	Length	5'-0"		
			Spacing	3¼"	5"	5"
45	7/8"φ×3½"	2	Length	5'-0"		
			Spacing	3¼"	6¼"	6¼"
46	7/8"φ×3½"	2	Length	6'-0"	6'-0"	
			Spacing	3"	4"	6½"
47	7/8"φ×3½"	5	Length	3'-6"		
			Spacing	3¼"	9½"	9½"
48	7/8"φ×3½"	3	Length	6'-0"	5'-0"	
			Spacing	3¼"	5"	8¼"
49	7/8"φ×3½"	5	Length	5'-0"	5'-0"	
			Spacing	3¼"	5"	9"

Schedule "A"

Beam No.	Stud Size	No. Of Rows		Zone 1	Zone 2	Zone 3
52	7/8"φ×3½"	2	Length	6'-0"	5'-0"	
			Spacing	3¼"	5"	6½"
53	7/8"φ×3½"	2	Length	5'-0"	5'-0"	
			Spacing	3"	4"	6½"
54	7/8"φ×3½"	3	Length	5'-0"	5'-0"	
			Spacing	3"	5"	10"
55	7/8"φ×3½"		Length	5'-0"	5'-0"	
			Spacing	3¼"	5½"	10"
56	7/8"φ×3½"	3	Length			
			Spacing	3¼"	3¼"	3¼"
57	7/8"φ×3½"	2	Length	6'-6"		
			Spacing	3¼"	6¼"	6¼"
58	7/8"φ×3½"	3	Length	6'-0"		
			Spacing	3¼"	6½"	6½"
59	7/8"φ×3½"	3	Length	7'-6"		
			Spacing	3¼"	5"	5"
60	7/8"φ×3½"	4	Length	10'-0"		
			Spacing	3¼"	7¾"	7¾"
61	7/8"φ×3½"	3	Length	5'-0"		
			Spacing	3¼"	7½"	7½"
62	7/8"φ×3½"	2	Length	6'-0"	4'-0"	
			Spacing	3¼"	5"	6¼"
63	7/8"φ×3½"	2	Length	5'-0"	4'-0"	
			Spacing	3¾"	5"	6½"
64	7/8"φ×3½"	2	Length	3'-0"	3'-0"	
			Spacing	3"	3¾"	5"
65	7/8"φ×3½"	3	Length	5'-3"	5'-3"	
			Spacing	3¼"	4½"	7¾"
66	7/8"φ×3½"	4	Length	6'-0"	5'-0"	
			Spacing	3¼"	3¾"	7¾"

Note :

LICENSED PROFESSIONAL ENGINEER — LESLIE E. ROBERTSON — No. 34360 — THE STATE OF NEW YORK

DESIGNED

SKILLING, HELLE, CHRISTIANSEN, ROBERTSON — Structural & Civil Engineers

PROJECT THE WORLD TRADE CENTER | TITLE SCHEDULE FOR SHEAR CONNECTORS | DATE 7-19-68

REVISIONS

Schedule "A"

Beam No.	Stud Size	No. Of Rows		Zone 1	Zone 2	Zone 3
67	7/8"φ×3½"	4	Length	6'-0"	4'-0"	
			Spacing	3¼"	5"	8¾"
68	7/8"φ×3½"	3	Length	5'-0"	5'-0"	
			Spacing	3¼"	5"	10"
69	7/8"φ×3½"	3	Length	5'-0"		
			Spacing	3¼"	6"	6"
70	7/8"φ×3½"	5	Length	5'-0"		
			Spacing			
71	7/8"φ×3½"	3	Length	4'-0"	4'-0"	
			Spacing	3¼"	5"	7¾"
72	7/8"φ×3½"	2	Length	4'-6"	3'-6"	
			Spacing	3¼"	4"	6½"
73	7/8"φ×3½"	2	Length	6'-0"	6'-0"	
			Spacing	3"	4"	6½"
74	7/8"φ×3½"	3	Length	6'-0"	6'-0"	
			Spacing	3¼"	5½"	8¼"
75	7/8"φ×3½"	5	Length	6'-0"	5'-0"	
			Spacing	3¼"	5½"	11"
76	7/8"φ×3½"	3	Length	6'-0"	6'-0"	
			Spacing	3"	4"	7½"
77	7/8"φ×3½"	5	Length	4'-0"		
			Spacing	3¼"	9½"	9½"
78	7/8"φ×3½"	2	Length	6'-0"		
			Spacing	3"	10"	10"
79	7/8"φ×3½"	3	Length	6'-0"		
			Spacing	3¼"	4¼"	4¼"
80	7/8"φ×3½"	2	Length	6'-0"		
			Spacing	3"	8¼"	8¼"
81	7/8"φ×3½"	3	Length	6'-6"	5'-0"	
			Spacing	3¼"	5"	8¼"
82	7/8"φ×3½"	5 & 3	Length	6'-0"		
			Spacing	5@3½"	3@4"	3@4"
			Length			

Schedule "A"

Beam No.	Stud Size	No. Of Rows		Zone 1	Zone 2	Zone 3
85	7/8"φ×3½"	3	Length	6'-0"	4'-0"	
			Spacing	4"	5½"	8½"
86	7/8"φ×3½"	3	Length	6'-0"	4'-0"	
			Spacing	4¾"	5½"	13"
87	7/8"φ×3½"	4	Length	6'-0"	4'-0"	
			Spacing	3¼"	4¼"	6"
88	7/8"φ×3½"	4	Length	6'-0"	4'-0"	
			Spacing	3¼"	3½"	7½"
89	7/8"φ×3½"	4	Length	6'-0"	4'-0"	
			Spacing	3"	4¼"	7"
90	7/8"φ×3½"	4	Length	6'-0"	4'-0"	
			Spacing	3"	4"	6"
91	7/8"φ×3½"	4	Length	6'-0"	4'-0"	
			Spacing	3¾"	4¾"	6"
92	7/8"φ×3½"	4	Length	6'-0"		
			Spacing	3"	5"	5"
93	7/8"φ×3½"	4	Length	6'-0"		
			Spacing	3"	4½"	4½"
94	7/8"φ×3½"	4	Length	6'-0"		
			Spacing	3¼"	5¼"	5¼"
95	7/8"φ×3½"	4	Length	6'-0"		
			Spacing	3¾"	5¼"	5¼"
96	7/8"φ×3½"	5	Length	6'-0"	4'-0"	
			Spacing	3¼"	4½"	7"
97	7/8"φ×3½"	2	Length			
			Spacing	4"	4"	4"
98	7/8"φ×3½"	2	Length			
			Spacing	5¼"	5¼"	5¼"
99	7/8"φ×3½"	3	Length			
			Spacing	3½"	3½"	3½"

Note:

LICENSED PROFESSIONAL ENGINEER — LESLIE E. ROBERTSON — No. 34360 — STATE OF NEW YORK

DESIGNED

SKILLING, HELLE, CHRISTIANSEN, ROBERTSON — Structural & Civil Engineers

PROJECT THE WORLD TRADE CENTER | TITLE SCHEDULE FOR SHEAR CONNECTORS | DATE 7-19-68

REVISIONS

Schedule "A"

Beam No.	Stud Size	No. Of Rows		Zone 1	Zone 2	Zone 3
100	7/8"ϕ×3½"	3	Length			
			Spacing	4½"	4½"	4½"
101	7/8"ϕ×3½"	2	Length	4'-0"		
			Spacing	4"	7½"	7½"
102	7/8"ϕ×3½"	2	Length	7'-6"		
			Spacing	4"	7½"	7½"
103	7/8"ϕ×3½"	2	Length	6'-0"		
			Spacing			
104	7/8"ϕ×3½"	2	Length	7'-6"		
			Spacing	3"	4½"	4½"
105	7/8"ϕ×3½"	2	Length	6'-0"	4'-0"	
			Spacing	4"	6"	7½"
106	7/8"ϕ×3½"	2	Length	5'-0"	5'-0"	
			Spacing	3"	4"	5½"
107	7/8"ϕ×3½"	2	Length	6'-0"	6'-0"	
			Spacing	5"	7½"	10½"
108	7/8"ϕ×3½"	3	Length	10'-0"		
			Spacing	3"	7"	7"
109	7/8"ϕ×3½"	3	Length	5'-0"		
			Spacing	4"	9"	9"
110	7/8"ϕ×3½"	3	Length	5'-0"		
			Spacing	5"	6"	6"
111	7/8"ϕ×3½"	3	Length	10'-0"		
			Spacing	5"	6"	6"
112	7/8"ϕ×3½"	3	Length	5'-0"		
			Spacing	3"	15"	15"
113	7/8"ϕ×3½"	3	Length	5'-0"		
			Spacing	3½"	10½"	10½"
114	7/8"ϕ×3½"	3	Length	6'-0"	5'-0"	
			Spacing	3"	3½"	7"
115	7/8"ϕ×3½"	3	Length	6'-0"	4'-0"	
			Spacing	3"	4½"	8"
			Length	5'-0"	5'-0"	

Schedule "A"

Beam No.	Stud Size	No. Of Rows		Zone 1	Zone 2	Zone 3
118	7/8"ϕ×3½"	4	Length	5'-0"	5'-0"	
			Spacing	3"	9"	12"
119	7/8"ϕ×3½"	2	Length	5'-0"		
			Spacing	3"	5¾"	5¾"
			Length			
			Spacing			
			Length			
			Spacing			
			Length			
			Spacing			
			Length			
			Spacing			
			Length			
			Spacing			
			Length			
			Spacing			
			Length			
			Spacing			
			Length			
			Spacing			
			Length			
			Spacing			
			Length			
			Spacing			
			Length			
			Spacing			

Note:

LICENSED PROFESSIONAL ENGINEER — LESLIE E. ROBERTSON — No. 34360 — STATE OF NEW YORK

Designed

SKILLING, HELLE, CHRISTIANSEN, ROBERTSON — Structural & Civil Engineers

PROJECT THE WORLD TRADE CENTER | TITLE SCHEDULE FOR SHEAR CONNECTORS | DATE 11-5-68

REVISIONS

Schedule "A"

Beam No.	Stud Size	No. Of Rows		Zone 1	Zone 2	Zone 3
120	7/8"ϕ x 3½"	4	Length	12'-0"		
			Spacing	4"	10½"	10½"
121		3	Length	7'-0"		
			Spacing	3½"	18"	18"
122		3	Length	6'-0"	5'-0"	
			Spacing	3½"	9"	12"
123 (see note 2)		4	Length	6'-0"	4'-0"	
			Spacing	3"	4"	6"
124 (see note 2)		5	Length	6'-0"	4'-0"	
			Spacing	3"	4¼"	7"
125 (see note 2)		7	Length	6'-0"	4'-0"	
			Spacing	3"	4"	6¾"
126		5	Length	6'0"	4'-0"	
			Spacing	3"	4"	6"
127		3	Length	6'-0"	4'-0"	
			Spacing	3½"	6¾"	6¾"
128		2	Length	6'-0"	4'-0"	
			Spacing	4"	7"	7"
129		3	Length	6'-0"	4'-0"	
			Spacing	4"	5½"	9"
130		4	Length	6'-0"	4'-0"	
			Spacing	3"	8¼"	8¼"
131		5	Length	6'-0"	4'-0"	
			Spacing	3"	4¼"	6½"
132		6	Length	6'-0"	4'-0"	
			Spacing	3"	5¼"	8¾"
133		2	Length	6'-0"		
			Spacing	3"	6¼"	6¼"
134		3	Length	6'-0"	4'-0"	
			Spacing	4"	5"	8¼"
135		2	Length	6'-0"	6'-0"	
			Spacing	3"	4"	6¼"
[illegible]		[illegible]	Length	[illegible]'-0"	[illegible]'-0"	

Schedule "A"

Beam No.	Stud Size	No. Of Rows		Zone 1	Zone 2	Zone 3
138	7/8"ϕ x 3½"	2	Length	4'-0"	6'-0"	
			Spacing	3¾"	5¾"	15"
139		4	Length	4'-0"	6'-0"	
			Spacing	4¼"	7¾"	16"
140		4	Length	4'-0"	6'-0"	
			Spacing	3½"	5"	13"
141		4	Length	5'-0"		
			Spacing	[illegible]		
142		2	Length	4'-0"	6'-0"	—
			Spacing	3¼"	4½"	12¼"
143		2	Length	4'-0"	6'-0"	
			Spacing	3¼"	4¾"	12½"
144		2	Length	4'-0"	6'-0"	
			Spacing	3½"	5"	11"
145		2	Length	4'-0"	6'-0"	
			Spacing	3¾"	5½"	13¼"
146		2	Length	4'-0"	6'-0"	
			Spacing	3½"	5"	12¼"
147		2	Length	4'-0"	6'-0"	
			Spacing	3½"	4¾"	10¾"
148		2	Length	4'-0"	6'-0"	
			Spacing	5½"	8"	20"
149		2	Length	4'-0"	6'-0"	
			Spacing	5½"	8¾"	8¾"
150		2	Length	4'-0"	6'-0"	
			Spacing	4¾"	6¾"	18"
151		2	Length	4'-0"	6'-0"	
			Spacing	5"	8½"	—
152	7/8"ϕ x 3½"	2	Length	4'-0"	6'-0"	
			Spacing	4¾"	8"	

Notes:
1. See Dwg. 12-SK2-6 for explanation

LICENSED PROFESSIONAL ENGINEER — LESLIE E. ROBERTSON — No. 34360 — UNIVERSITY OF [illegible] NEW YORK

DESIGNED

SKILLING, HELLE, CHRISTIANSEN, ROBERTSON — Structural & Civil Engineers

PROJECT THE WORLD TRADE CENTER | TITLE SCHEDULE FOR SHEAR CONNECTORS | DATE 11-5-68

REVISIONS

Schedule "A"

Beam No.	Stud Size	No. Of Rows		Zone 1	Zone 2	Zone 3
153	7/8"ϕx3½"	2	Length	4'-0"	6'-0"	
			Spacing	4½"	7¾"	
154		4	Length	4'-0"	6'-0"	
			Spacing	5"	6¾"	15"
155		4	Length	4'-0"	6'-0"	
			Spacing	4½"	7½"	13½"
156		2	Length	4'-0"	6'-0"	
			Spacing	5"	7"	12"
157		4	Length	4'-0"	6'-0"	
			Spacing	5¾"	7¾"	17"
158		2	Length	4'-0"	6'-0"	
			Spacing	3¾"	5¾"	21"
159		2	Length	4'-0"	6'-0"	
			Spacing	3¾"	6¼"	
160		2	Length	4'-0"	6'-0"	
			Spacing	4¼"	6¼"	16"
161		2	Length	4'-0"	6'-0"	
			Spacing	3"	4"	9"
162		4	Length	4'-0"	6'-0"	
			Spacing	4¾"	6½"	14½"
163		4	Length	4'-0"	6'-0"	
			Spacing	4"	5¼"	17½"
164		4	Length	4'-0"	6'-0"	
			Spacing	5¼"	7½"	22"
165		2	Length	4'-0"	6'-0"	
			Spacing	3½"	5½"	5½"
166		4	Length	4'-0"	6'-0"	
			Spacing	5"	7"	16½"
167		2	Length	4'-0"	6'-0"	
			Spacing	3¼"	4¾"	14"
168		4	Length	4'-0"	6'-0"	
			Spacing	3"	4¼"	9½"
[illegible]			Length	4'-0"	6'-0"	

Schedule "A"

Beam No.	Stud Size	No. Of Rows		Zone 1	Zone 2	Zone 3
171	7/8"ϕx3½"	2	Length	4'-0"	6'-0"	
			Spacing	3¼"	4¾"	12¼"
172		2	Length	4'-0"	6'-0"	
			Spacing	3½"	4½"	10"
173		2	Length	4'-0"	6'-0"	
			Spacing	3¼"	4½"	10"
174		2	Length	4'-0"	5'-0"	
			Spacing	3¾"	5"	11"
175		2	Length	4'-0"	6'-0"	
			Spacing	4¾"	6½"	14¼"
176		4	Length	4'-0"	6'-0"	
			Spacing	4¼"	6"	13"
177		2	Length	4'-0"	6'-0"	
			Spacing	3¾"	5¼"	13½"
178		2	Length	4'-0"	6'-0"	
			Spacing	4½"	6¼"	13¾"
179		2	Length	4'-0"	6'-0"	
			Spacing	3½"	5"	11"
180		2	Length	4'-0"	6'-0"	
			Spacing	3¼"	4½"	10"
181		4	Length	4'-0"	6'-0"	
			Spacing	4½"	6"	13¼"
182		4	Length	4'-0"	6'-0"	
			Spacing	4½"	6"	13½"
183		2	Length	4'-0"	6'-0"	
			Spacing	3¾"	5"	9¾"
184		2	Length	4'-0"	6'-0"	
			Spacing	4¼"	6"	13"
185	7/8"ϕx3½"	6	Length	4'-0"	6'-0"	
			Spacing	3¾"	5¼"	11½"

Notes:

LICENSED PROFESSIONAL ENGINEER — LESLIE E. ROBERTSON — No. 34360 — UNIVERSITY OF THE STATE OF NEW YORK

DESIGNED

SKILLING, HELLE, CHRISTIANSEN, ROBERTSON — Structural & Civil Engineers

PROJECT THE WORLD TRADE CENTER | TITLE SCHEDULE FOR SHEAR CONNECTORS | DATE 11-5-68

REVISIONS

Schedule "A"

Beam No.	Stud Size	No. Of Rows		Zone 1	Zone 2	Zone 3
186	7/8"ϕx3½"	4	Length	4'-0"	6'-0"	
			Spacing	4¾"	6½"	14"
187		2	Length	4'-0"	6'-0"	
			Spacing	3¼"	4½"	10"
188		2	Length	5'-6"		
			Spacing	3¼"		
189		2	Length	4'-0"	6'-0"	
			Spacing		7½"	
190		2	Length	4'-0"	6'-0"	
			Spacing	3¼"	4½"	9"
191		2	Length	4'-0"	6'-0"	
			Spacing	3"	4"	8½"
192		4	Length	4'-0"	6'-0"	
			Spacing	5¼"	7½"	19¾"
193		4	Length	4'-0"	6'-0"	
			Spacing	5"	6¾"	14½"
194		4	Length	4'-0"	6'-0"	
			Spacing	5¼"	7¼"	16"
195		2	Length	4'-0"	6'-0"	
			Spacing	3¾"	5"	11"
196		4	Length	4'-0"	6'-0"	
			Spacing	3¾"	5"	11"
197		4	Length	4'-0"	6'-0"	
			Spacing	5½"	7½"	16¼"
198		4	Length	4'-0"	6'-0"	
			Spacing	5¾"	7¾"	17"
199		4	Length	4'-0"	3'-0"	
			Spacing	4¾"	11"	
200		2	Length	4'-0"	6'-0"	
			Spacing	3½"	5"	11"
201		4	Length	4'-0"	6'-0"	
			Spacing	3¾"	5¼"	10¾"
202		4	Length	4'-0"	6'-0"	
			Spacing	5¼"	7¼"	16"
203	7/8"ϕx3½"	4	Length	4'-0"	6'-0"	
			Spacing	3¾"	5¼"	14½"

Schedule "A"

Beam No.	Stud Size	No. Of Rows		Zone 1	Zone 2	Zone 3
204	7/8"ϕx3½"	4	Length	4'-0"	6'-0"	
			Spacing	5"	8½"	
205		2	Length	4'-0"		
			Spacing	3"	9"	
206		2	Length	4'-0"	6'-0"	
			Spacing	3"	4"	8"
207		2	Length	4'-0"	6'-0"	
			Spacing			
208		4	Length	4'-0"	5'-0"	
			Spacing	5¾"	10½"	
209		2	Length	4'-0"	3'-5"	
			Spacing	4¾"	10"	
210		2	Length	4'-0"	6'-0"	
			Spacing	3"	4"	7½"
211		2	Length	4'-0"	6'-0"	
			Spacing	3"	4"	8½"
212		2	Length	4'-0"	6'-0"	
			Spacing	4¼"	5½"	9"
213 (see dwg 12-JK2-160)		2	Length	4'-0"	6'-0"	
			Spacing	4"	5¼	12"
214		4	Length	4'-0"	6'-0"	
			Spacing	4¼"	6"	13"
215		4	Length	4'-0"	6'-0"	
			Spacing	5½"	7½"	16½"
216		4	Length	4'-0"	6'-0"	
			Spacing	5"	7¾"	24"
217		2	Length	4'-0"	6'-0"	
			Spacing	3¼"	3¾"	6¼"
218	7/8"ϕx3½"	4	Length	4'-0"	6'-0"	
			Spacing	4¼"	5¾"	21"

Notes:
1. See Dwg. 12-JK2-8 for explanation of schedule.

LICENSED PROFESSIONAL ENGINEER — LESLIE E. ROBERTSON — No. 34360 — UNIVERSITY OF THE STATE OF NEW YORK

DESIGNED | DRAWN | REVISED

12-JK2-15

SKILLING, HELLE, CHRISTIANSEN, ROBERTSON — Structural & Civil Engineers

PROJECT THE WORLD TRADE CENTER | TITLE SCHEDULE FOR SHEAR CONNECTORS | DATE 11-5-68

REVISIONS

Schedule "A"

Beam No.	Stud Size	No. Of Rows		Zone 1	Zone 2	Zone 3
219	7/8"ϕ x 3½"	4	Length	4'-0"	6'-0"	
			Spacing	5"	7"	15"
220		2	Length	4'-0"	6'-0"	
			Spacing	3¾"	5"	11¼"
221		2	Length	4'-0"	6'-0"	
			Spacing	3¼"	4¾"	19½"
222		2	Length	4'-0"	6'-0"	
			Spacing	3"	4"	7"
223		2	Length	4'-0"	6'-0"	
			Spacing	4"	6¼"	24"
224		4	Length	4'-0"	6'-0"	
			Spacing	5½"	7"	11¾"
225		6	Length	4'-0"	6'-0"	
			Spacing	4"	4¾"	7½"
226		2	Length	4'-0"	6'-0"	
			Spacing	3¾"	5¼"	11¾"
227		4	Length	4'-0"	6'-0"	
			Spacing	5"	7"	16½"
228		4	Length	4'-0"	6'-0"	
			Spacing	4¼"	5¾"	12¾"
229		4	Length	4'-0"	6'-0"	
			Spacing	4¾"	6½"	14"
230		6	Length	4'-0"	6'-0"	
			Spacing	4¼"	6"	12¼"
231		2	Length	4'-0"	6'-0"	
			Spacing	5½"	7½"	17"
232		4	Length	4'-0"	6'-0"	
			Spacing	5"	7¼"	16"
233		4	Length	4'-0"	6'-0"	
			Spacing	4"	5"	8½"
234		4	Length	4'-0"	6'-0"	
			Spacing	3"	4¼"	8¼"
			Length	4'-0"	6'-0"	

Schedule "A"

Beam No.	Stud Size	No. Of Rows		Zone 1	Zone 2	Zone 3
237	7/8"ϕ x 3½"	2	Length	4'-0"	6'-0"	
			Spacing	3½"	4½"	7½"
238		4	Length	4'-0"	6'-0"	
			Spacing	5"	7"	17"
239		2	Length	4'-0"	6'-0"	
			Spacing	5¼"	7¼"	16"
240		4	Length	4'-0"	6'-0"	
			Spacing	3¾"	4¾"	7"
241		2	Length	4'-0"	6'-0"	
			Spacing	4½"	5¼"	7"
242		4	Length	4'-0"	6'-0"	
			Spacing	3"	4"	8"
243		2	Length	4'-0"	6'-0"	
			Spacing	3¼"	4½"	8¾"
244		2	Length	4'-0"	6'-0"	
			Spacing	4"	6"	24"
245		2	Length	4'-0"	6'-0"	
			Spacing	3½"	4¾"	10½"
246		4	Length	4'-0"	6'-0"	
			Spacing	5½"	7½"	16½"
247		2	Length	4'-0"	6'-0"	
			Spacing	4¼"	5"	6½"
248		4	Length	4'-0"	6'-0"	
			Spacing	3½"	5"	11"
249		2	Length	4'-0"	6'-0"	
			Spacing	3½"	4½"	8"
250		4	Length	4'-0"	6'-0"	
			Spacing	3"	5½"	
251	7/8"ϕ x 3½"	2	Length	4'-0"	6'-0"	
			Spacing	3¼"	4¾"	11"

Notes:
1. See Dwg. 12-J42-S for explanation

LICENSED PROFESSIONAL ENGINEER — LESLIE E. ROBERTSON — No. 34360 — UNIVERSITY OF THE STATE OF NEW YORK

DESIGNED

SKILLING, HELLE, CHRISTIANSEN, ROBERTSON — Structural & Civil Engineers

PROJECT THE WORLD TRADE CENTER | TITLE SCHEDULE FOR SHEAR CONNECTORS | DATE 11-5-68

REVISIONS

Schedule "A"

Beam No.	Stud Size	No. Of Rows		Zone 1	Zone 2	Zone 3
252	7/8"ϕ x 3½"	4	Length	4'-0"	6'-0"	
			Spacing	5"	7"	16½"
253		4	Length	4'-0"	6'-0"	
			Spacing	3¼"	4½"	12½"
254		4	Length	4'-0"	6'-0"	
			Spacing	5½"	7¾"	18"
255		4	Length	4'-0"	6'-0"	
			Spacing	3¾"	5¼"	15"
256		4	Length	4'-0"	6'-0"	
			Spacing	4½"	6"	15¼"
257		6	Length	4'-0"	6'-0"	
			Spacing	4¼"	5"	7¾"
258		4	Length	4'-0"	6'-0"	
			Spacing	3¼"	4"	5¾"
259		4	Length	4'-0"	6'-0"	
			Spacing	3½"	4¼"	7¼"
260		4	Length	4'-0"	6'-0"	
			Spacing	4½"	6"	12"
261		4	Length	4'-0"	6'-0"	
			Spacing	5¼"	7"	13½"
262		4	Length	4'-0"	6'-0"	
			Spacing	5"	6¾"	16½"
263		4	Length	4'-0"	6'-0"	
			Spacing	5¾"	7¾"	18½"
264		4	Length	4'-0"	6'-0"	
			Spacing	4¾"	6½"	15"
265		4	Length	4'-0"	6'-0"	
			Spacing	4¾"	6½"	16"
266		2	Length	4'-0"	6'-0"	
			Spacing	4"	5½"	14½"
267		2	Length	4'-0"	6'-0"	
			Spacing	4½"	6½"	16½"
			Length	4'-0"	6'-0"	

Schedule "A"

Beam No.	Stud Size	No. Of Rows		Zone 1	Zone 2	Zone 3
270	7/8"ϕ x 3½"	2	Length	4'-0"	6'-0"	
			Spacing	6"	8"	18"
271		2	Length	4'-0"	6'-0"	
			Spacing	5¼"	7"	15¾"
272		2	Length	4'-0"	6'-0"	
			Spacing	5¼"	7¼"	16"
273		2	Length	4'-0"	6'-0"	
			Spacing	6¼"	8½"	17"
274		4	Length	4'-0"	6'-0"	
			Spacing	3"	4"	9"
275		2	Length	4'-0"	6'-0"	
			Spacing	3¼"	4½"	10"
276		2	Length	4'-0"	6'-0"	
			Spacing	4½"	6¼"	13½"
277		2	Length	4'-0"	6'-0"	
			Spacing	3¼"	5¾"	
278		4	Length	4'-0"	6'-0"	
			Spacing	5"	8¾"	
279		2	Length	4'-0"	6'-0"	
			Spacing	4¼"	10"	
280		4	Length	4'-0"	6'-0"	
			Spacing	4½"	6¾"	23"
281		2	Length	4'-0"	6'-0"	
			Spacing	3½"	3½"	
282		4	Length	4'-0"	6'-0"	
			Spacing	5¼"	5¼"	
283		2	Length	4'-0"	6'-0"	
			Spacing	3½"		
284	7/8"ϕ x 3½"	2	Length	4'-0"	6'-0"	
			Spacing	3½"	5½"	5½"

Notes:

1. See Dwg. 12-1132.8 for explanation

LICENSED PROFESSIONAL ENGINEER — LESLIE E. ROBERTSON — No. 34360 — UNIVERSITY OF THE STATE OF NEW YORK

DESIGNED

SKILLING, HELLE, CHRISTIANSEN, ROBERTSON — Structural & Civil Engineers

PROJECT THE WORLD TRADE CENTER | TITLE SCHEDULE FOR SHEAR CONNECTORS | DATE 11-5-68

REVISIONS

Schedule "A"

Beam No.	Stud Size	No. Of Rows		Zone 1	Zone 2	Zone 3
285	7/8"ϕx3½"	2	Length	4'-0"	6'-0"	
			Spacing	4½"	7¾"	
286		2	Length	5'-0"		
			Spacing	7½"		
287		2	Length	4'-0"	6'-0"	
			Spacing	7¼"	9¾"	21½"
288		2	Length	4'-0"	3'-0"	
			Spacing	5½"	12½"	
289		2	Length	4'-0"	3'-0"	
			Spacing	5"	11¾"	
290		2	Length	4'-0"	6'-0"	
			Spacing	4½"	7½"	
291		2	Length	4'-0"	3'-0"	
			Spacing	6"	13½"	
292		2	Length	4'-0"	3'-5"	
			Spacing	4"	8¾"	
293		2	Length	4'-0"	6'-0"	
			Spacing	4"	6½"	
294		2	Length	4'-0"	6'-0"	
			Spacing	5¾"	9½"	
295		2	Length	4'-0"	6'-0"	
			Spacing	4½"	6"	13½"
296		2	Length	4'-0"	6'-0"	
			Spacing	3"	4"	9"
297		2	Length	4'-0"	6'-0"	
			Spacing	5¾"	8"	17½"
298		4	Length	4'-0"	6'-0"	
			Spacing	3½"	5"	11"
299		2	Length	4'-6"		
			Spacing	4¾"		
701		4	Length	4'-0"	6'-0"	
			Spacing	4¾"	7¼"	24"
702			Length	4'-0"	6'-0"	

Schedule "A"

Beam No.	Stud Size	No. Of Rows		Zone 1	Zone 2	Zone 3
704	7/8"ϕx3½"	2	Length	4'-0"	5'-0"	
			Spacing	4½"	7¾"	
705		4	Length	4'-0"		
			Spacing	5¼"	12"	
706		4	Length	4'-0"		
			Spacing	4¼"	10"	
707		2	Length	4'-0"	3'-0"	
			Spacing	5½"	12½"	
708		2	Length	4'-0"		
			Spacing	6¾"	12½"	
709		3	Length	4'-0"	6'-0"	
			Spacing	3½"	5¾"	
710		2	Length	4'-0"	6'-0"	
			Spacing	4"	6¾"	
711		2	Length	4'-6"		
			Spacing	4"		
712		2	Length	4'-0"		
			Spacing	5¼"		
713		4	Length	4'-0"		
			Spacing	4¾"		
714		2	Length	4'-0"	6'-0"	
			Spacing	5"	8¼"	24"
715		2	Length	4'-0"		
			Spacing	9¾"	9¾"	
716		2	Length	4'-0"	6'-0"	
			Spacing	3¾"	6½"	
717		2	Length	4'-0"		
			Spacing	6¾"		
718		2	Length	4'-0"	6'-0"	
			Spacing	5¾"	8"	19"
719		2	Length	4'-0"		
			Spacing	7¾"	22"	
720			Length	4'-0"	6'-0"	

LICENSED PROFESSIONAL ENGINEER — LESLIE E. ROBERTSON — NO. 34360 — STATE OF THE STATE OF NEW YORK

RELEASED

SKILLING, HELLE, CHRISTIANSEN, ROBERTSON — Structural & Civil Engineers

PROJECT THE WORLD TRADE CENTER | TITLE SCHEDULE FOR SHEAR CONNECTORS | DATE 12-3-68

REVISIONS
4-18-69
4-14-70

Schedule "A"

Beam No.	Stud Size	No. Of Rows		Zone 1	Zone 2	Zone 3
721	¾"ϕ×3"	4	Length	5'-0"	5'-0"	
			Spacing	3½"	4¼"	7"
722	¾"ϕ×3"	4	Length	5'-0"		
			Spacing	3½"	5¼"	
723	⅞"ϕ×3½"	2	Length	5'-0"	5'-0"	
			Spacing	4½"	6"	9"
724	⅞"ϕ×3½"	3	Length	5'-6"	5'-6"	
			Spacing	3"	5"	8"
725	⅞"ϕ×3½"	3	Length	5'-0"	5'-0"	
			Spacing	4½"	6"	8"
726	⅞"ϕ×3½"	2	Length	5'-0"	5'-0"	
			Spacing	8"	12"	12"
727	⅞"ϕ×3½"	3	Length	5'-6"	5'-6"	
			Spacing	4"	5½"	7"
728	⅞"ϕ×3½"	3	Length	4'-0"	6'-0"	
			Spacing	8"	10"	12"
729	⅞"ϕ×3½"	3	Length	5'-3"	5'-3"	
			Spacing	4½"	7½"	8"
730	⅞"ϕ×3½"	3	Length	6'-0"	6'-0"	
			Spacing	5"	8½"	12"
731	⅞"ϕ×3½"	4	Length	2'-0"		
			Spacing	3"	9"	
732	⅞"ϕ×3½"	4	Length	4'-0"	6'-0"	
			Spacing	3"	4½"	9"
733	⅞"ϕ×3½"	3	Length	4'-0"	6'-0"	
			Spacing	3"	4½"	8"
734	⅞"ϕ×3½"	3	Length	4'-0"	6'-0"	
			Spacing	3"	4½"	7½"
			Length			
			Spacing			
			Length			
			Spacing			
			Length			

Schedule "A"

Beam No.	Stud Size	No. Of Rows		Zone 1	Zone 2	Zone 3
			Length			
			Spacing			
			Length			
			Spacing			
			Length			
			Spacing			
			Length			
			Spacing			
			Length			
			Spacing			
			Length			
			Spacing			
			Length			
			Spacing			
			Length			
			Spacing			
			Length			
			Spacing			
			Length			
			Spacing			
			Length			
			Spacing			
			Length			
			Spacing			
			Length			
			Spacing			
			Length			
			Spacing			

Note:
See Dwg. 12-JK2-8 for explanation

LICENSED PROFESSIONAL ENGINEER
LESLIE E. ROBERTSON
No. 34360
UNIVERSITY OF THE STATE OF NEW YORK

DESIGNED

SKILLING, HELLE, CHRISTIANSEN, ROBERTSON — Structural & Civil Engineers

PROJECT THE WORLD TRADE CENTER | TITLE SCHEDULE FOR SHEAR CONNECTOR | DATE 9-20-68

REVISIONS

SCHEDULE "B"

For beams not included in tables 12-JK2-20 thru. 31

Beam No.	Stud Size	No. Of Rows	Total No. Of Studs	Beam No.	Stud Size	No. Of Rows	Total No. Of Studs
301	3/4"ø x 3"	3	171				
302	3/4"ø x 3"	3	174				
303	3/4"ø x 3"	2	54				

Note:
1. See notes on 12-JK2-20 for further description of studs.
2. All studs to be spaced uniformly over the length of beam

LICENSED PROFESSIONAL ENGINEER — LESLIE E. ROBERTSON — No. 34360 — STATE OF NEW YORK

DESIGNED

DRAWN

REVIEWED

12-JK2-18

SKILLING, HELLE, CHRISTIANSEN, ROBERTSON — Structural & Civil Engineers

PROJECT THE WORLD TRADE CENTER | TITLE SCHEDULE FOR SHEAR CONNECTOR | DATE 9-20-68

REVISIONS

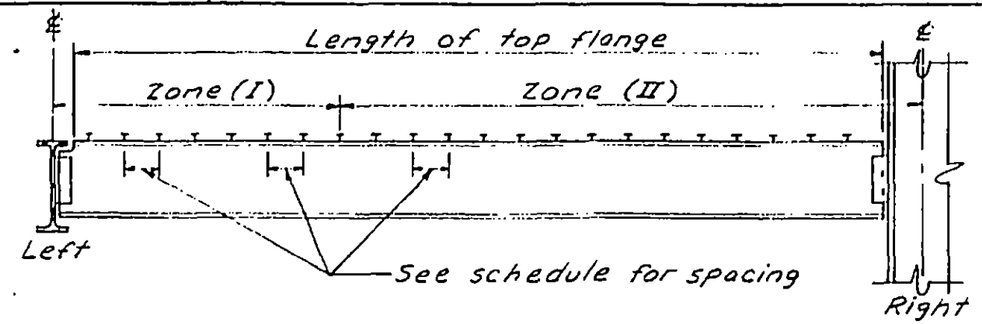

SCHEDULE "C"

For beams where point of max. moment is not at ℄ of span

Beam No.	Stud Size	ZONE (I) Length	No. Of Rows	Total No. Of Studs	ZONE (II) Length	No. Of Rows	Total No. Of Studs
401	¾ϕ x 3"	20'-0"	2	88	10'-0"	3	87
402	¾ϕ x 3"	8'-8"	3	90	21'-4"	2	90
403	¾ϕ x 3"	9'-0"	3	87	15'-0"	2	88
404	¾ϕ x 3"	18'-0"	2	86	12'-0"	3	87
405	¾ϕ x 3"	17'-5"	2	76	10'-0"	3	78
406	¾ϕ x 3"	15'-0"	2	58	12'-6"	3	57
407	¾ϕ x 3"	20'-0"	2	90	10'-0"	3	90
408	¾ϕ x 3"	10'-5"	3	90	19'-7"	2	88
409	¾ϕ x 3"	10'-5"	3	84	19'-7"	2	84
410	¾ϕ x 3"	23'-0"	2	76	7'-0"	3	78
411	¾ϕ x 3"	23'-0"	2	84	7'-0"	4	84
412	¾ϕ x 3"	20'-0"	2	84	10'-0"	3	84
413	¾ϕ x 3"	4'-6"	5	75	25'-6"	2	76
414	¾ϕ x 3"	22'-0"	2	86	8'-0"	3	87
415	¾ϕ x 3"	12'-6"	3	87	17'-6"	2	86
416	¾ϕ x 3"	12'-3"	2	76	7'-9"	3	75
417	¾ϕ x 3"	17'-0"	2	68	13'-0"	2	68
418	¾ϕ x 3"	9'-3"	3	63	18'-9"	2	64
419	¾ϕ x 3"	9'-0"	3	87	22'-6"	2	86
420	¾ϕ x 3"	18'-0"	2	86	10'-6"	3	87

Beam No.	Stud Size	ZONE (I) Length	No. Of Rows	Total No. Of Studs	ZONE (II) Length	No. Of Rows	Total No. Of Studs
421	¾"ϕx3"	10'-0"	3	87	20'-0"	2	86
422	¾"ϕx3"	4'-6"	5	85	25'-6"	2	86
423	¾"ϕx3"	10'-0"	3	69	20'-0"	2	68
424	¾ϕx3"	7'-6"	4	88	22'-6"	2	88
425	¾ϕx3"	7'-6"	4	84	22'-6"	2	84
426	¾"ϕx3"	22'-0"	2	76	8'-0"	3	75
427	¾"ϕx3"	12'-6"	4	88	17'-6"	2	88
428	¾"ϕx3"	5'-8"	4	68	24'-4"	2	68
429	¾"ϕx3"	21'-0"	2	84	9'-0"	3	84
430	¾"ϕx3"	11'-0"	4	88	19'-0"	2	88
431	¾"ϕx3"	10'-0"	3	75	20'-0"	2	76
432	¾"ϕx3"	24'-6"	2	86	5'-6"	5	85
433	¾"ϕx3"	17'-0"	2	90	13'-0"	3	90
434	¾"ϕx3"	17'-0"	2	76	13'-0"	3	75
435	¾"ϕx3"	18'-6"	2	66	9'-6"	3	87
436	¾"ϕx3"	21'-0"	2	88	9'-0"	4	88
437	¾"ϕx3"	11'-6"	3	90	18'-6"	2	90
438	¾"ϕx3"	11'-6"	3	75	18'-6"	2	76
439	¾"ϕx3"	15'-0"	2	76	10'-0"	3	78

Note:
See notes on 12-JK2-20 for further description of studs.

LICENSED PROFESSIONAL ENGINEER — LESLIE E. ROBERTSON — No. 34360 — UNIVERSITY OF THE STATE OF NEW YORK

DESIGNED

DRAWN

REVIEWED

12-JK2-19

SKILLING, HELLE, CHRISTIANSEN, ROBERTSON — Structural & Civil Engineers

PROJECT: THE WORLD TRADE CENTER | TITLE: SCHEDULE FOR SHEAR CONNECTORS | DATE: 4-18-69

REVISIONS

SCHEDULE "C"

Beam No.	Stud size	ZONE (I) Length	ZONE (I) No. of rows	ZONE (I) Total No of studs	ZONE (II) Length	ZONE (II) No. of rows	ZONE (II) Total No of studs
440	$\frac{3}{4}\phi \times 3"$	14'-9"	3	84	21'-3"	3	84
441	$\frac{3}{4}\phi \times 3"$	14'-7"	2	40	17'-5"	2	40
442	$\frac{3}{4}\phi \times 3"$	10'-0"	3	63	20'-0"	3	63
443	$\frac{3}{4}\phi \times 3"$	20'-0"	3	72	14'-0"	3	72
444	$\frac{3}{4}\phi \times 3"$	14'-0"	3	54	21'-0"	3	54
445	$\frac{3}{4}\phi \times 3"$	14'-0"	3	69	22'-7"	3	69
446	$\frac{3}{4}\phi \times 3"$	16'-0"	3	69	20'-0"	3	69
447	$\frac{3}{4}\phi \times 3"$	14'-0"	3	69	19'-0"	3	69
448	$\frac{3}{4}\phi \times 3"$	14'-6"	3	69	18'-6"	3	69
449	$\frac{3}{4}\phi \times 3"$	13'-7"	3	60	19'-5"	3	60
450	$\frac{3}{4}\phi \times 3"$	14'-6"	3	84	21'-6"	3	84
451	$\frac{3}{4}\phi \times 3"$	15'-2"	2	21	11'-10"	2	21
452	$\frac{3}{4}\phi \times 3"$	22'-0"	3	78	11'-0"	3	78
453	$\frac{3}{4}\phi \times 3"$	11'-0"	3	48	9'-0"	3	48

SCHEDULE "C"

Beam No.	Stud size	ZONE (I) Length	ZONE (I) No. of rows	ZONE (I) Total No of studs	ZONE (II) Length	ZONE (II) No. of rows	ZONE (II) Total No of studs

Note:
See 12-JK2-19 & 12-JK2-20 for further description of studs.

LICENSED PROFESSIONAL ENGINEER — LESLIE E. ROBERTSON — No. 34360 — UNIVERSITY OF THE STATE OF NEW YORK

DESIGNED

DRAWN S.C.

REVIEWED E.L.

12-JK2-19A

SKILLING, HELLE, CHRISTIANSEN, ROBERTSON — Structural & Civil Engineers

PROJECT	TITLE	DATE
THE WORLD TRADE CENTER	SHEAR STUD CONNECTOR TABLE FORMAT	7-19-68

REVISIONS

9-20-68

DESCRIPTION OF SHEAR STUD COLLECTOR TABLES 1, 2 AND 3

BEAM - NOMINAL BEAM SIZE FROM A.I.S.C. LISTING

STUD - NOMINAL STUD SIZE (DIAMETER X LENGTH)

TABLE NO. 1 - THE NUMBER OF SHEAR STUDS CALCULATED USING FORMULA (19) A.I.S.C. FOR THE CONCRETE AND STEEL RANGE SHOWN

TABLE NO. 2 - SAME AS TABLE 1

TABLE NO. 3 - SAME AS TABLE 1

USE OF TABLES

1. REQUIRED: NOMINAL BEAM SIZE AND YIELD STRENGTH OF THE STEEL BEAM; COMPRESSIVE STRENGTH AND THICKNESS OF THE CONCRETE SLAB.

2. A STUD COUNT CAN BE SELECTED FROM TABLES 1, 2 OR 3 USING ONLY THE FIRST THREE OF THE ABOVE REQUIREMENTS.

3. A STUD COUNT SELECTION IS MADE ALSO FROM TABLES 4, 5 OR 6 USING THE ABOVE REQUIREMENTS EXCEPT FOR YIELD STRENGTH OF THE STEEL BEAM. WHERE SLAB THICKNESSES EXCEED THE SCOPE OF THESE TABLES, USE THE STUD COUNT FOR THE LARGEST TABULATED SLAB THICKNESS.

DESCRIPTION OF SHEAR STUD COLLECTOR TABLES 4, 5 AND 6

BEAM SIZE RANGE - NOMINAL BEAM SIZES FOR WHICH ADJACENT TABLES APPLY

STUD - NOMINAL STUD SIZE (DIAMETER X LENGTH)

SLAB T - THICKNESS OF CONCRETE SLAB

TABLE NO. 4 - THE NUMBER OF SHEAR STUDS CALCULATED USING FORMULA (18) A.I.S.C. FOR THE CONCRETE RANGE SHOWN

TABLE NO. 5 - SAME AS TABLE 4

TABLE NO. 6 - SAME AS TABLE 4

4. TWICE THE SMALLER OF THE TWO VALUES OBTAINED IN STEPS 2 AND 3 IS THE TOTAL NUMBER OF STUDS REQUIRED.

NOTES:

1. WHERE A SYMBOL ( ) IS SHOWN ON PLANS, SEE STUD SCHEDULE ON 12-JK2-8.
   FOR 300 SERIES, SEE SCHEDULE B ON 12-JK2-18.
   FOR 400 SERIES, SEE SCHEDULE C ON 12-JK2-19.
2. STUD SPACINGS: LONGITUDINAL - 2'-0" MAX. 3" MIN.
   TRANSVERSE - 1-7/8" MIN.
   DISTANCE FROM EDGE OF FLANGES - 1" MIN.
3. SHEAR CONNECTORS FOR BEAMS AT EL. 264, SEE 12-JK2-5.

LICENSED PROFESSIONAL ENGINEERS STATE OF NEW YORK

DESIGNED

DRAWN

REVIEWED

SKILLING-HELLE-CHRISTIANSEN-ROBERTSON Civil & Structural Engineers

PROJECT THE WORLD TRADE CENTER | TITLE STUD SHEAR CONNECTOR TABLES | DATE 7/19/68

REVISIONS

BEAM	STUD	TABLE NO. 1 STUDS F'C=3000 FY=36	TABLE NO. 1 STUDS F'C=3000 FY=42	TABLE NO. 2 STUDS F'C=4000 FY=36	TABLE NO. 2 STUDS F'C=4000 FY=42	TABLE NO. 2 STUDS F'C=4000 FY=50	TABLE NO. 3 LIGHT WEIGHT F'C=3000 FY=36	TABLE NO. 3 LIGHT WEIGHT F'C=3000 FY=42	TABLE NO. 3 LIGHT WEIGHT F'C=3000 FY=45	TABLE NO. 3 LIGHT WEIGHT F'C=3000 FY=50	TABLE NO. 3 LIGHT WEIGHT F'C=3000 FY=60
36 WF 300	3/4 X 3	138	161	120	140	166	163	190	203	224	271
36 WF 280	3/4 X 3	129	151	112	130	155	152	177	190	211	253
36 WF 260	3/4 X 3	120	140	104	121	144	141	165	177	196	235
36 WF 245	3/4 X 3	113	132	98	114	136	133	155	166	185	222
36 WF 230	3/4 X 3	107	124	92	107	128	125	146	156	174	208
36 WF 194	3/4 X 3	90	105	78	91	108	104	123	132	147	176
36 WF 182	3/4 X 3	84	98	73	85	101	99	116	124	137	165
36 WF 170	3/4 X 3	79	92	68	79	95	93	108	116	129	154
36 WF 160	3/4 X 3	74	86	64	75	89	87	102	109	121	145
36 WF 150	3/4 X 3	70	81	60	70	83	82	95	102	113	136
36 WF 135	3/4 X 3	63	73	54	63	75	74	86	92	102	122
33 WF 240	3/4 X 3	111	129	96	112	133	130	152	163	181	217
33 WF 220	3/4 X 3	102	119	88	103	122	120	140	149	166	199
33 WF 200	3/4 X 3	93	108	80	93	111	109	127	136	151	181
33 WF 152	3/4 X 3	70	82	61	71	85	83	97	103	115	138
33 WF 141	3/4 X 3	65	76	57	66	79	77	90	96	107	128
33 WF 130	3/4 X 3	60	70	52	61	72	71	83	89	98	118
33 WF 118	3/4 X 3	55	64	47	55	66	64	75	80	89	107
30 WF 210	3/4 X 3	97	113	84	98	117	114	133	143	158	190
30 WF 190	3/4 X 3	88	103	76	89	106	103	121	129	143	172
30 WF 172	3/4 X 3	80	93	69	80	96	94	109	117	130	156
30 WF 132	3/4 X 3	61	71	53	62	73	72	84	90	100	120
30 WF 124	3/4 X 3	58	67	50	58	69	68	79	84	94	112
30 WF 116	3/4 X 3	54	63	47	54	65	63	74	79	88	105
30 WF 108	3/4 X 3	50	59	43	51	60	59	69	74	82	98
30 WF 99	3/4 X 3	46	54	40	46	55	54	63	67	75	90
27 WF 177	3/4 X 3	82	96	71	83	98	96	112	120	134	160
27 WF 160	3/4 X 3	74	86	64	75	89	87	102	109	121	145
27 WF 145	3/4 X 3	67	78	58	68	81	79	92	99	110	131
27 WF 114	3/4 X 3	53	62	46	53	64	62	73	78	86	103
27 WF 102	3/4 X 3	47	55	41	48	57	56	65	70	77	93
27 WF 94	3/4 X 3	44	51	38	44	52	51	60	64	71	85
27 WF 84	3/4 X 3	39	46	34	40	47	46	54	57	64	76

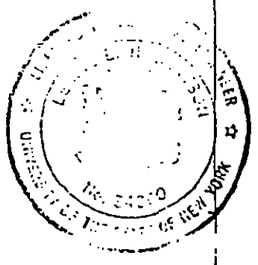

12-JK2- 21

SKILLING-HELLE-CHRISTIANSEN-ROBERTSON — Civil & Structural Engineers

PROJECT: THE WORLD TRADE CENTER | TITLE: STUD SHEAR CONNECTOR TABLES | DATE: 7/19/68

REVISIONS

BEAM	STUD	TABLE NO. 1 STONE F'C=3000 FY=36	TABLE NO. 1 STONE F'C=3000 FY=42	TABLE NO. 2 STONE F'C=4000 FY=36	TABLE NO. 2 STONE F'C=4000 FY=42	TABLE NO. 2 STONE F'C=4000 FY=50	TABLE NO. 3 LIGHT WEIGHT F'C=3000 FY=36	TABLE NO. 3 LIGHT WEIGHT F'C=3000 FY=42	TABLE NO. 3 LIGHT WEIGHT F'C=3000 FY=45	TABLE NO. 3 LIGHT WEIGHT F'C=3000 FY=50	TABLE NO. 3 LIGHT WEIGHT F'C=3000 FY=60
24 WF 160	3/4 X 3	74	86	64	75	89	87	102	109	121	145
24 WF 145	3/4 X 3	67	78	58	68	81	79	92	99	109	131
24 WF 130	3/4 X 3	60	70	52	61	72	71	83	88	98	118
24 WF 120	3/4 X 3	56	65	48	56	67	65	76	82	91	109
24 WF 110	3/4 X 3	51	60	44	52	61	60	70	75	83	100
24 WF 100	3/4 X 3	47	54	40	47	56	55	64	68	76	91
24 WF 94	3/4 X 3	45	52	38	45	53	51	60	64	71	85
24 WF 84	3/4 X 3	39	46	34	40	47	46	54	57	64	76
24 WF 76	3/4 X 3	36	41	31	36	43	42	49	52	58	69
24 WF 68	3/4 X 3	32	37	28	32	38	37	43	47	52	62
21 WF 142	3/4 X 3	66	77	57	66	79	77	90	97	107	129
21 WF 127	3/4 X 3	59	69	51	59	71	69	81	86	96	115
21 WF 112	3/4 X 3	52	61	45	52	62	61	71	76	85	102
21 WF 96	3/4 X 3	45	52	39	45	54	52	61	65	73	87
21 WF 82	3/4 X 3	38	44	33	39	46	45	52	56	62	74
21 WF 73	3/4 X 3	34	40	30	34	41	40	47	50	55	66
21 WF 68	3/4 X 3	32	37	28	32	38	37	43	47	52	62
21 WF 62	3/4 X 3	29	34	25	29	35	34	40	42	47	56
21 WF 55	3/4 X 3	26	30	22	26	31	30	35	38	42	50
18 WF 114	3/4 X 3	53	62	46	53	63	62	72	78	86	103
18 WF 105	3/4 X 3	49	57	42	49	58	57	67	72	79	95
18 WF 96	3/4 X 3	45	52	39	45	54	52	61	65	73	87
18 WF 86	3/4 X 3	40	46	34	40	47	46	54	58	64	77
18 WF 77	3/4 X 3	36	42	31	36	43	42	49	53	58	70
18 WF 70	3/4 X 3	33	38	28	33	39	38	45	48	53	64
18 WF 64	3/4 X 3	30	35	26	30	36	35	41	44	49	58
18 WF 60	3/4 X 3	28	33	24	28	34	33	38	41	46	55
18 WF 55	3/4 X 3	26	30	22	26	31	30	35	38	42	50
18 WF 50	3/4 X 3	24	27	20	24	28	28	32	34	38	46
18 WF 45	3/4 X 3	21	25	18	21	25	25	29	31	34	41

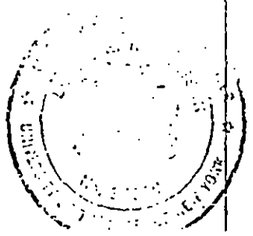

12-JK2- 22

SKILLING-HELLE-CHRISTIANSEN-ROBERTSON — Civil & Structural Engineers

PROJECT: THE WORLD TRADE CENTER | TITLE: STUD SHEAR CONNECTOR TABLES | DATE: 7/19/68

REVISIONS

BEAM	STUD	TABLE NO. 1 STONE F'C=3000 FY=36	TABLE NO. 1 STONE F'C=3000 FY=42	TABLE NO. 2 STONE F'C=4000 FY=36	TABLE NO. 2 STONE F'C=4000 FY=42	TABLE NO. 2 STONE F'C=4000 FY=50	TABLE NO. 3 LIGHT WEIGHT F'C=3000 FY=36	TABLE NO. 3 LIGHT WEIGHT F'C=3000 FY=42	TABLE NO. 3 LIGHT WEIGHT F'C=3000 FY=45	TABLE NO. 3 LIGHT WEIGHT F'C=3000 FY=50	TABLE NO. 3 LIGHT WEIGHT F'C=3000 FY=60
16 WF 96	3/4 X 3	45	57	39	45	54	52	61	65	73	87
16 WF 88	3/4 X 3	41	48	36	41	49	48	56	60	67	80
16 WF 78	3/4 X 3	36	42	32	37	44	43	50	53	59	71
16 WF 71	3/4 X 3	33	39	29	33	40	39	45	49	54	65
16 WF 64	3/4 X 3	30	35	26	30	36	35	41	44	49	58
16 WF 58	3/4 X 3	27	32	24	27	33	32	37	40	44	53
16 WF 50	3/4 X 3	24	28	21	24	29	28	32	34	38	46
16 WF 45	3/4 X 3	21	25	18	21	25	25	29	31	34	41
16 WF 40	3/4 X 3	19	22	16	19	23	22	26	28	31	37
16 WF 36	3/4 X 3	17	20	15	17	20	20	23	25	28	33
14 WF 136	3/4 X 3	63	73	55	64	76	74	86	93	103	123
14 WF 127	3/4 X 3	59	69	51	59	71	69	81	86	96	115
14 WF 119	3/4 X 3	55	64	48	56	66	65	76	81	90	108
14 WF 111	3/4 X 3	52	60	45	52	62	61	71	76	84	101
14 WF 103	3/4 X 3	48	56	41	48	57	56	65	70	78	93
14 WF 95	3/4 X 3	44	52	38	45	53	52	61	65	72	86
14 WF 87	3/4 X 3	40	47	35	41	49	48	55	59	66	79
14 WF 84	3/4 X 3	39	46	34	40	47	46	54	57	64	76
14 WF 78	3/4 X 3	36	42	32	37	44	43	50	53	59	71
14 WF 74	3/4 X 3	35	40	30	35	41	41	47	51	56	67
14 WF 68	3/4 X 3	32	37	28	32	38	37	43	47	52	62
14 WF 61	3/4 X 3	29	33	25	29	34	34	39	42	46	56
14 WF 53	3/4 X 3	25	29	22	25	30	29	34	36	40	48
14 WF 48	3/4 X 3	23	26	20	23	27	26	31	33	37	44
14 WF 43	3/4 X 3	20	24	18	20	24	24	28	30	33	39
14 WF 38	3/4 X 3	18	21	16	18	21	21	24	26	29	35
14 WF 34	3/4 X 3	16	19	14	16	19	19	22	24	26	31
14 WF 30	3/4 X 3	14	17	12	14	17	17	19	21	23	28

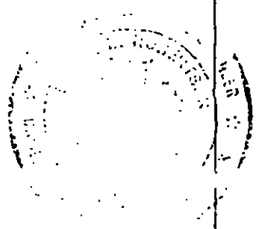

SKILLING-HELLE-CHRISTIANSEN-ROBERTSON — Civil & Structural Engineers

PROJECT: THE WORLD TRADE CENTER | TITLE: STUD SHEAR CONNECTOR TABLES | DATE: 7/19/68

REVISIONS

BEAM	STUD	TABLE NO. 1 STONE F'C=3000 FY=36	TABLE NO. 1 STONE F'C=3000 FY=42	TABLE NO. 2 STONE F'C=4000 FY=36	TABLE NO. 2 STONE F'C=4000 FY=42	TABLE NO. 2 STONE F'C=4000 FY=50	TABLE NO. 3 LIGHT WEIGHT F'C=3000 FY=36	TABLE NO. 3 LIGHT WEIGHT F'C=3000 FY=42	TABLE NO. 3 LIGHT WEIGHT F'C=3000 FY=45	TABLE NO. 3 LIGHT WEIGHT F'C=3000 FY=50	TABLE NO. 3 LIGHT WEIGHT F'C=3000 FY=60
12 WF 99	3/4 X 3	46	54	40	46	55	54	63	67	75	90
12 WF 92	3/4 X 3	43	50	37	43	51	50	59	63	70	84
12 WF 85	3/4 X 3	40	46	34	40	47	46	54	58	64	77
12 WF 79	3/4 X 3	37	43	32	37	44	43	50	54	60	72
12 WF 72	3/4 X 3	34	39	29	34	40	39	46	49	55	65
12 WF 65	3/4 X 3	30	35	26	31	36	36	42	44	49	59
12 WF 58	3/4 X 3	27	32	24	27	33	32	37	40	44	53
[illegible]	[illegible]	[illegible]	[illegible]	[illegible]	[illegible]	[illegible]	[illegible]	[illegible]	[illegible]	[illegible]	[illegible]
12 WF 50	3/4 X 3	24	27	20	24	28	28	32	34	38	46
12 WF 45	3/4 X 3	21	25	18	21	25	25	29	31	34	41
12 WF 40	3/4 X 3	19	22	16	19	23	22	26	28	31	37
12 WF 36	3/4 X 3	17	20	15	17	20	20	23	25	28	33
12 WF 31	3/4 X 3	15	17	13	15	18	17	20	21	24	28
12 WF 27	3/4 X 3	13	15	11	13	15	15	18	19	21	25
10 WF 112	3/4 X 3	52	61	45	52	62	61	71	76	85	102
10 WF 100	3/4 X 3	47	54	40	47	56	55	64	68	76	91
10 WF 89	3/4 X 3	41	48	36	42	50	49	57	61	67	81
10 WF 77	3/4 X 3	36	42	31	36	43	42	49	53	58	70
10 WF 72	3/4 X 3	34	39	29	34	40	39	46	49	55	65
10 WF 66	3/4 X 3	31	36	27	31	37	36	42	45	50	60
10 WF 60	3/4 X 3	28	33	24	28	34	33	38	41	46	55
10 WF 54	3/4 X 3	25	29	22	26	30	30	35	37	41	49
10 WF 49	3/4 X 3	23	27	20	23	28	27	31	34	37	45
10 WF 45	3/4 X 3	21	25	18	21	25	25	29	31	34	41
10 WF 39	3/4 X 3	18	21	16	19	22	22	25	27	30	36
10 WF 33	3/4 X 3	16	18	14	16	19	18	21	23	25	30
10 WF 29	3/4 X 3	14	16	12	14	17	16	19	20	22	27
10 WF 25	3/4 X 3	12	14	10	12	14	14	16	17	19	23
10 WF 21	3/4 X 3	10	12	9	10	12	12	14	15	16	19
8 WF 67	3/4 X 3	31	36	27	32	38	37	43	46	51	61
8 WF 58	3/4 X 3	27	32	24	27	33	32	37	40	44	53
8 WF 48	3/4 X 3	23	26	20	23	27	26	31	33	37	44
8 WF 40	3/4 X 3	19	22	16	19	23	22	26	28	31	37
8 WF 35	3/4 X 3	17	19	14	17	20	19	23	24	27	32
8 WF 31	3/4 X 3	15	17	13	15	18	17	20	21	24	28
8 WF 28	3/4 X 3	13	16	12	13	16	16	18	19	22	26
8 WF 24	3/4 X 3	12	13	10	12	14	13	16	17	19	22
8 WF 20	3/4 X 3	10	11	8	10	12	11	13	14	16	19
8 WF 17	3/4 X 3	8	10	7	8	10	10	11	12	13	16

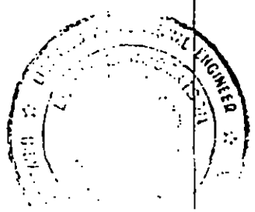

12-JK2- 24

SKILLING-HELLE-CHRISTIANSEN-ROBERTSON — Civil & Structural Engineers

PROJECT: THE WORLD TRADE CENTER | TITLE: STUD SHEAR CONNECTOR TABLES | DATE: 7/19/68

REVISIONS

BEAM	STUD	TABLE NO. 1 STONE F'C=3000 FY=36	TABLE NO. 1 STONE F'C=3000 FY=42	TABLE NO. 2 STONE F'C=4000 FY=36	TABLE NO. 2 STONE F'C=4000 FY=42	TABLE NO. 2 STONE F'C=4000 FY=50	TABLE NO. 3 LIGHT WEIGHT F'C=3000 FY=36	TABLE NO. 3 LIGHT WEIGHT F'C=3000 FY=42	TABLE NO. 3 LIGHT WEIGHT F'C=3000 FY=45	TABLE NO. 3 LIGHT WEIGHT F'C=3000 FY=50	TABLE NO. 3 LIGHT WEIGHT F'C=3000 FY=60
24 B 61.0	3/4 X 3	29	33	25	29	34	34	39	42	46	56
24 B 55.0	3/4 X 3	26	30	22	26	31	30	35	38	42	50
21 B 49.0	3/4 X 3	23	27	20	23	28	27	31	34	37	45
21 B 44.0	3/4 X 3	21	24	18	21	25	24	28	30	34	40
18 B 40.0	3/4 X 3	19	22	16	19	23	22	26	28	31	37
18 B 35.0	3/4 X 3	17	19	14	17	20	19	23	24	27	32
16 B 31.0	3/4 X 3	15	17	13	15	18	17	20	21	24	28
16 B 26.0	3/4 X 3	12	14	11	13	15	15	17	18	20	24
14 B 26.0	3/4 X 3	12	14	11	13	15	15	17	18	20	24
14 B 22.0	3/4 X 3	11	12	9	11	13	12	14	15	17	20
14 B 17.2	3/4 X 3	8	10	7	8	10	10	11	12	13	16
12 B 22.0	3/4 X 3	11	12	9	11	13	12	14	15	17	20
12 B 19.0	3/4 X 3	9	11	8	9	11	11	13	13	15	18
12 B 16.5	3/4 X 3	8	9	7	8	10	9	11	12	13	15
12 B 14.0	3/4 X 3	7	8	6	7	8	8	9	10	11	13
10 B 19.0	3/4 X 3	9	11	8	9	11	11	13	13	15	18
10 B 17.0	3/4 X 3	8	10	7	8	10	10	11	12	13	16
10 B 15.0	3/4 X 3	7	9	6	7	9	9	10	11	12	14
10 B 11.5	5/8 X 2-1/2	8	9	7	8	10	9	11	12	13	15
8 B 15.0	3/4 X 3	7	9	6	7	9	9	10	11	12	14
8 B 13.0	3/4 X 3	6	7	6	7	8	8	9	9	10	12
8 B 10.0	5/8 X 2-1/2	7	8	6	7	9	6	10	10	11	14
6 B 16.0	3/4 X 3	8	9	7	8	9	9	11	11	13	15
6 B 12.0	3/4 X 3	6	7	5	6	7	7	8	9	10	11
6 B 8.5	5/8 X 2-1/2	6	7	5	6	7	7	8	9	10	12

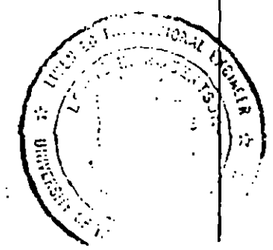

12-JK2- 25

SKILLING-HELLE-CHRISTIANSEN-ROBERTSON — Civil & Structural Engineers

PROJECT: THE WORLD TRADE CENTER | TITLE: STUD SHEAR CONNECTOR TABLES | DATE: 7/19/68

REVISIONS

BEAM SIZE RANGE	STUD	SLAB THICK.	TABLE NO. 4 STONE F'C=3000	TABLE NO. 5 STONE F'C=4000	TABLE NO. 6 LIGHT WEIGHT F'C=3000
36WF300 - 36WF230	3/4 X 3	4.50	49	51	52
		5.00	54	62	63
		5.50	64	74	75
		6.00	75	87	89
		7.00	100	115	118
		8.00	129	148	151
		11.00	230	266	271
		[illegible]	[illegible]	[illegible]	[illegible]
		5.00	51	59	60
		5.50	61	71	72
		6.00	72	83	85
		7.00	97	111	114
		8.00	125	144	147
		9.00	149	172	176
33WF240 - 33WF200	3/4 X 3	4.50	44	51	52
		5.00	54	62	63
		5.50	64	73	75
		6.00	75	86	88
		7.00	100	115	117
		8.00	128	147	150
		9.75	164	213	217
33WF152 - 33WF118	3/4 X 3	4.50	42	49	50
		5.00	51	59	60
		5.50	61	70	72
		6.00	72	83	85
		7.00	96	111	113
		7.75	117	135	138

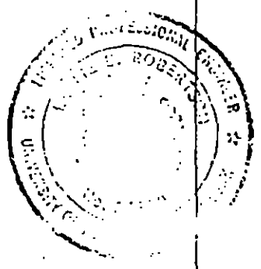

SKILLING-HELLE-CHRISTIANSEN-ROBERTSON — Civil & Structural Engineers

PROJECT: THE WORLD TRADE CENTER | TITLE: STUD SHEAR CONNECTOR TABLES | DATE: 7/19/68

REVISIONS

BEAM SIZE RANGE	STUD	SLAB T (IN.)	TABLE NO. 4 STONE F'C=3000	TABLE NO. 5 STONE F'C=4000	TABLE NO. 6 LIGHT WEIGHT F'C=3000
30WF210 - 30WF172	3/4 X 3	4.50	44	51	52
		5.00	53	61	62
		5.50	63	73	74
		6.00	74	86	87
		7.00	99	114	116
		8.00	127	147	150
		9.25	162	186	190
30WF132 - 30WF 99	3/4 X 3	4.50	42	48	49
		5.00	51	58	60
		5.50	61	70	71
		6.00	71	82	84
		7.00	96	110	112
		7.25	102	117	120
27WF177 - 27WF145	3/4 X 3	4.50	43	50	51
		5.00	53	61	62
		5.50	63	72	74
		6.00	74	85	87
		7.00	98	113	116
		8.00	126	146	149
		8.50	136	157	160
27WF114 - 27WF 84	3/4 X 3	4.50	41	48	49
		5.00	50	58	59
		5.50	60	69	71
		6.00	71	82	83
		6.75	88	101	103
24WF160 - 24WF130	3/4 X 3	4.50	43	50	51
		5.00	53	61	62
		5.50	63	72	74
		6.00	74	85	87
		7.00	98	113	116
		8.00	123	142	145
24WF120 - 24WF100	3/4 X 3	4.50	42	49	50
		5.00	51	59	60
		5.50	61	71	72
		6.00	72	83	85
		7.00	93	107	109
24WF 94 - 24WF 68	3/4 X 3	4.50	41	47	48
		5.00	50	57	59
		[illegible]	60	69	70
		6.00	70	81	83
		6.25	73	84	85

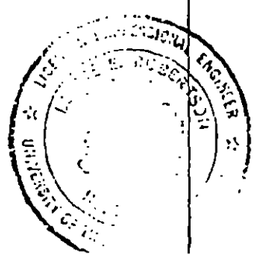

12-JK2- 27

SKILLING-HELLE-CHRISTIANSEN-ROBERTSON — Civil & Structural Engineers

PROJECT: T.E. WORLD TRADE CENTER | TITLE: STUD SHEAR CONNECTOR TABLES | DATE: 7/19/68

REVISIONS

BEAM SIZE RANGE	STUD	SLAB T (IN.)	TABLE NO. 4 STONE F'C=3000	TABLE NO. 5 STONE F'C=4000	TABLE NO. 6 LIGHT WEIGHT F'C=3000
21WF142 - 21WF112	3/4 X 3	4.50	43	49	50
		5.00	52	60	61
		5.50	62	71	73
		6.00	73	84	86
		7.00	98	112	115
		7.50	109	126	129
21WF 96 - 21WF 82	3/4 X 3	4.50	41	47	48
		5.00	50	57	59
		5.50	60	69	70
		6.00	70	81	83
		6.25	74	85	87
21WF 73 - 21WF 55	3/4 X 3	4.50	41	47	48
		5.00	49	57	58
		5.50	56	65	66
18WF114 - 18WF 96	3/4 X 3	4.50	42	49	50
		5.00	51	59	60
		5.50	61	71	72
		6.00	72	83	85
		6.75	88	101	103
18WF 85 - 18WF 64	3/4 X 3	4.50	41	47	48
		5.00	50	57	58
		5.50	59	69	70
		6.00	66	76	77
18WF 60 - 18WF 45	3/4 X 3	4.50	40	46	47
		5.00	47	54	55

LICENSED PROFESSIONAL ENGINEER — LESLIE E. ROBERTSON — UNIVERSITY OF T...

12-JK2- 28

SKILLING-HELLE-CHRISTIANSEN-ROBERTSON — Civil & Structural Engineers

PROJECT: THE WORLD TRADE CENTER | TITLE: STUD SHEAR CONNECTOR TABLES | DATE: 7/19/68

REVISIONS

BEAM SIZE RANGE	STUD	SLAB (IN.)	TABLE NO. 4 STONE F'C=3000	TABLE NO. 5 STONE F'C=4000	TABLE NO. 6 LIGHT WEIGHT F'C=3000
16WF 96 - 16WF 88	3/4 X 3	4.50	42	49	50
		5.00	51	59	60
		5.50	61	70	72
		6.00	72	83	85
		6.25	74	85	87
16WF 78 - 16WF 58	3/4 X 3	4.50	41	47	48
		5.00	50	57	58
		5.50	59	68	70
		5.75	60	69	71
16WF 50 - 16WF 36	3/4 X 3	4.50	39	45	46
14WF136 - 14WF 87	3/4 X 3	4.50	44	50	51
		5.00	53	61	62
		5.50	63	73	74
		6.00	74	85	87
		7.00	99	114	116
		7.25	105	121	123
14WF 84 - 14WF 78	3/4 X 3	4.50	42	49	50
		5.00	51	59	60
		5.50	61	71	72
		5.75	65	75	76
14WF 74 - 14WF 61	3/4 X 3	4.50	41	48	49
		5.00	50	58	59
		5.50	57	66	67
14WF 53 - 14WF 43	3/4 X 3	4.50	40	47	47
		4.75	41	47	48
14WF 38 - 14WF 30	3/4 X 3	4.50	30	34	35

LICENSED PROFESSIONAL ENGINEER
LESLIE E. ROBERTSON
No. 24310
UNIVERSITY OF T[illegible]

SKILLING-HELLE-CHRISTIANSEN-ROBERTSON Civil & Structural Engineers

PROJECT THE WORLD TRADE CENTER | TITLE STUD SHEAR CONNECTOR TABLES | DATE 7/19/68

REVISIONS

BEAM SIZE RANGE	STUD	SLAB T(IN.)	TABLE NO. 4 STONE F'C=3000	TABLE NO. 5 STONE F'C=4000	TABLE NO. 6 LIGHT WEIGHT F'C=3000
12WF 99 - 12WF 65	3/4 X 3	4.50	42	49	50
		5.00	51	59	60
		5.50	61	71	72
		6.00	72	83	85
		6.25	76	88	90
12WF 58 - 12WF 53	3/4 X 3	4.50	41	48	49
		4.75	45	52	53
12WF 50 - 12WF 40	3/4 X 3	4.50	39	45	46
12WF 36 - 12WF 27	3/4 X 3	4.50	28	32	33
10WF112 - 10WF 49	3/4 X 3	4.50	41	48	49
		5.00	50	58	59
		5.50	60	69	71
		6.00	71	82	83
		6.75	86	99	102
10WF 45 - 10WF 33	3/4 X 3	4.50	35	40	41
10WF 29 - 10WF 21	3/4 X 3	4.50	23	26	27
8WF 67 - 8WF 31	3/4 X 3	4.50	40	47	47
		5.00	49	57	58
		5.25	52	60	61
8WF 28 - 8WF 24	3/4 X 3	4.50	22	25	26
8WF 20 - 8WF 17	3/4 X 3	4.50	16	18	19

LICENSED PROFESSIONAL ENGINEER LESLIE E. ROBERTSON No. 24520 UNIVERSITY OF THE STATE OF NEW YORK

12-JK2- 30

SKILLING-HELLE-CHRISTIANSEN-ROBERTSON — Civil & Structural Engineers

PROJECT: THE WORLD TRADE CENTER | TITLE: STUD SHEAR CONNECTOR TABLES | DATE: 7/19/68

REVISIONS

BEAM SIZE RANGE	STUD	SLAB (MIN.)	TABLE NO. 4 STONE F'C=3000	TABLE NO. 5 STONE F'C=4000	TABLE NO. 6 LIGHT WEIGHT F'C=3000
24 B 41 - 24 B 55	3/4 X 3	4.50 5.00	40 47	46 54	47 54
21 B 44 - 21 B 44	3/4 X 3	4.50	38	44	45
18 B 40 - 18 B 50	3/4 X 3	4.50	31	37	37
18 B 31 - 18 B 76	3/4 X 3	4.50	24	28	28
14 B 26 - 14 B 22	3/4 X 3	4.50	20	23	24
14 B 17 - 14 B 17	3/4 X 3	4.50	14	16	16
12 B 22 - 12 B 14	3/4 X 3	4.50	17	20	20
10 B 19 - 10 B 15	3/4 X 3	4.50	15	17	18
10 B 11.5	5/8 X 2-1/2	4.50	12	15	15
8 B 15 - 8 B 13	3/4 X 3	4.50	12	14	14
8 B 10	5/8 X 2-1/2	4.50	12	13	14
6 B 16 - 6 B 12	3/4 X 3	4.50	13	15	15
6 B 8.5	5/8 X 2-1/2	4.50	10	11	12

LICENSED PROFESSIONAL ENGINEER — LESLIE E. ROBERTSON — UNIVERSITY OF THE STATE

12-JK2- 31

SKILLING - HELLE - CHRISTIANSEN - ROBERTSON Structural & Civil Engineers

PROJECT THE WORLD TRADE CENTER | TITLE BEAM AND GIRDER DTLS. - SPRINKLER PIPE HOLES | DATE 6-7-68

REVISIONS

SCHEDULE - HOLES IN WEBS OF BEAMS & GIRDERS

MARK	DIAMETER	ELEV. OF ℄ HOLE	REINFORCEMENT REQUIRED
S-1	5"	288'-1"	none
S-2	10"	288'-0"	Detail a
S-3	5"	288'-0"	none
S-4	9"	287'-6"	none
S-5	9"	288'-6"	none
S-6	10"	288'-5"	Detail a
S-7	8"	288'-2"	none

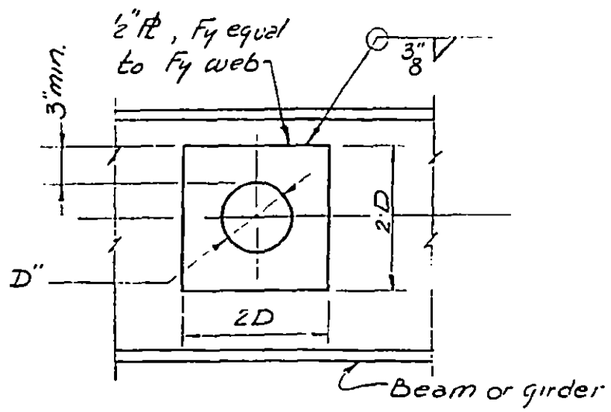

Detail a

For locations of holes, see Plans.

LICENSED PROFESSIONAL ENGINEER
LESLIE E. ROBERTSON
No. 34360
UNIVERSITY OF THE STATE OF NEW YORK

12-JK2-49

SKILLING - HELLE - CHRISTIANSEN - ROBERTSON Structural & Civil Enginoors

PROJECT THE WORLD TRADE CENTER | TITLE DETAIL OF PLATE GIRDER | DATE 2-29-68

REVISIONS
4-5-68
6-28-68
1-3-69

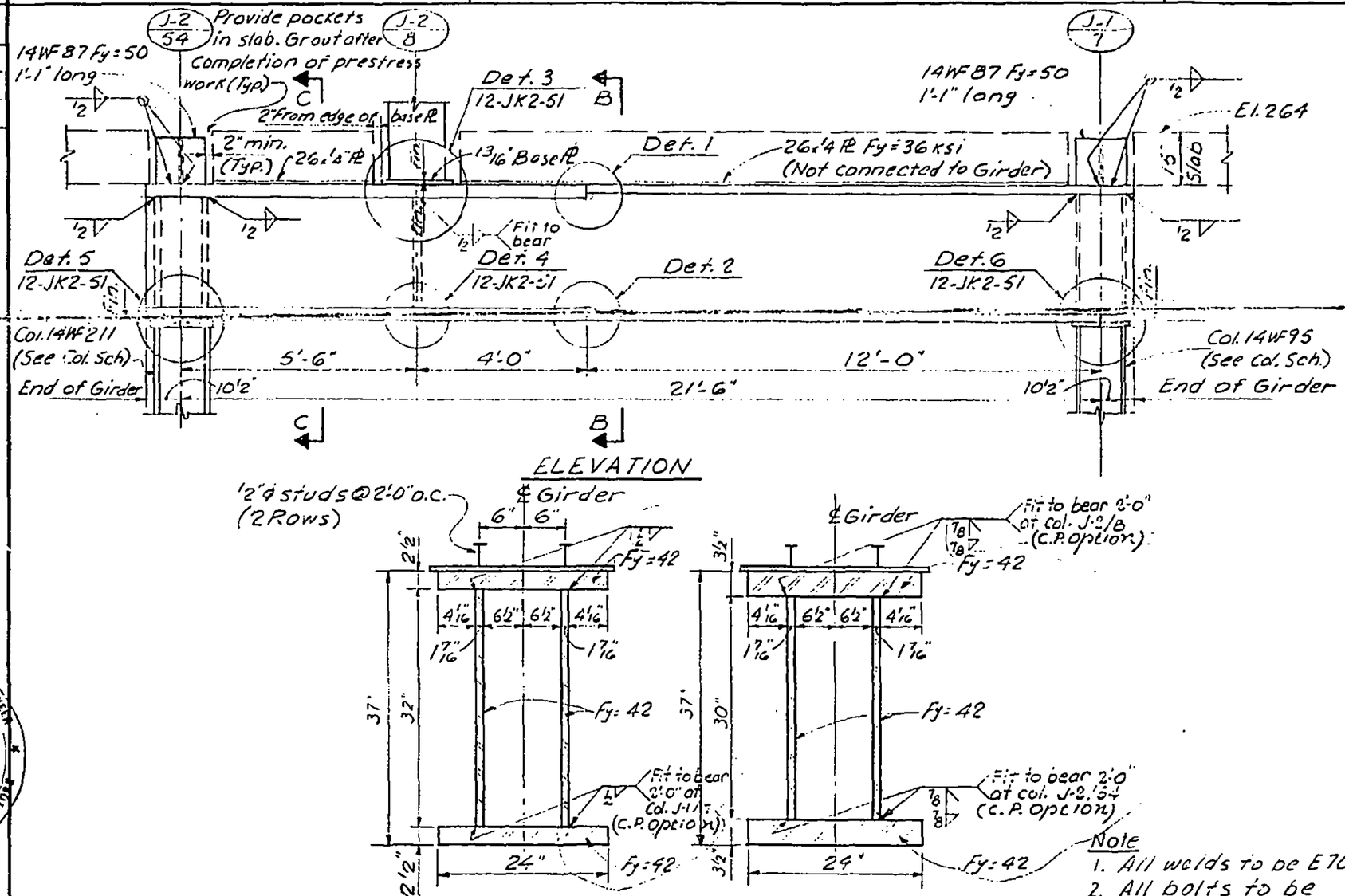

Detail 1 (as shown)
Detail 2 (reflected)

12-JK2-50

LICENSED PROFESSIONAL ENGINEER
LESLIE E. ROBERTSON
No. 34360
UNIVERSITY OF THE STATE OF NEW YORK

DRAWN S.T.M.
REVIEWED E.L.

SKILLING - HELLE - CHRISTIANSEN - ROBERTSON Structural & Civil Engineers

PROJECT THE WORLD TRADE CENTER | TITLE DETAIL OF PLATE GIRDER | DATE 2-29-68

REVISIONS

7-19-68

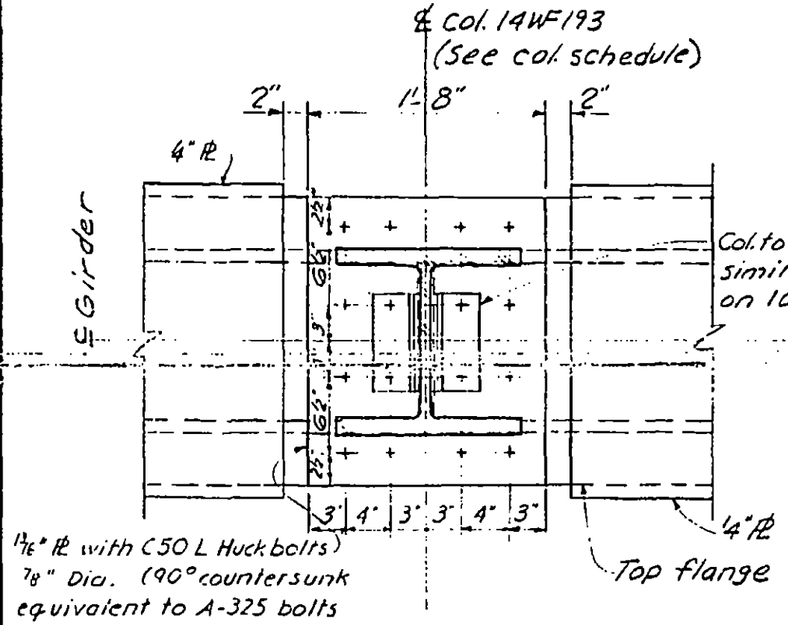

Detail 3

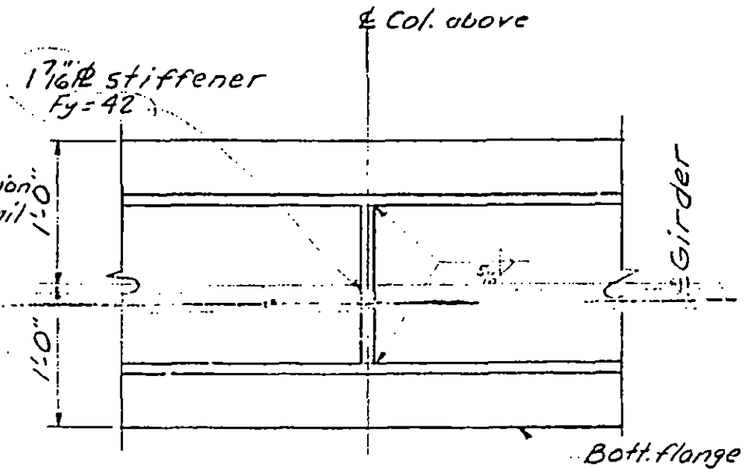

Detail 4

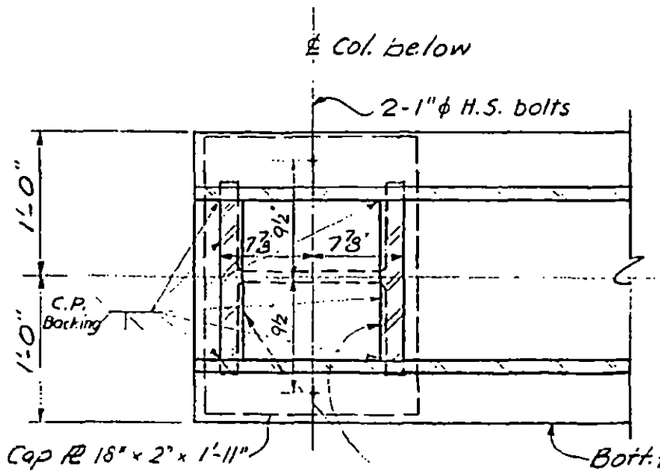

Detail 5

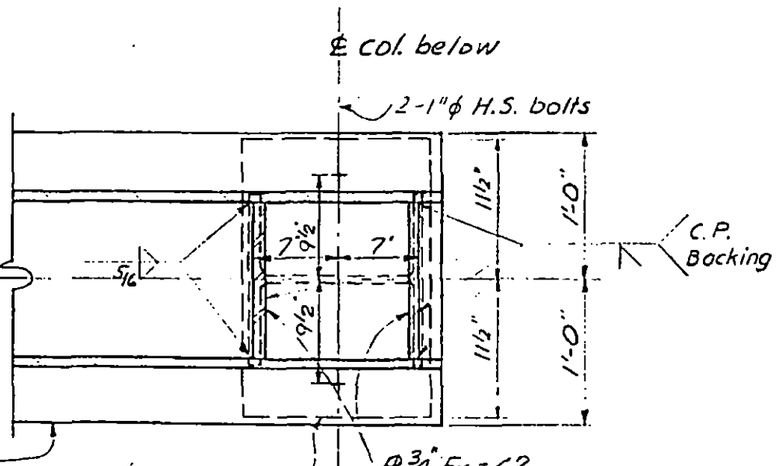

Detail 6

12-JK2-51

SKILLING - HELLE - CHRISTIANSEN - ROBERTSON Structural & Civil Engineers

PROJECT: THE WORLD TRADE CENTER | TITLE: DETAIL OF PLATE GIRDER | DATE: 2-29-68

REVISIONS
4-5-68
6-28-68
1-3-69

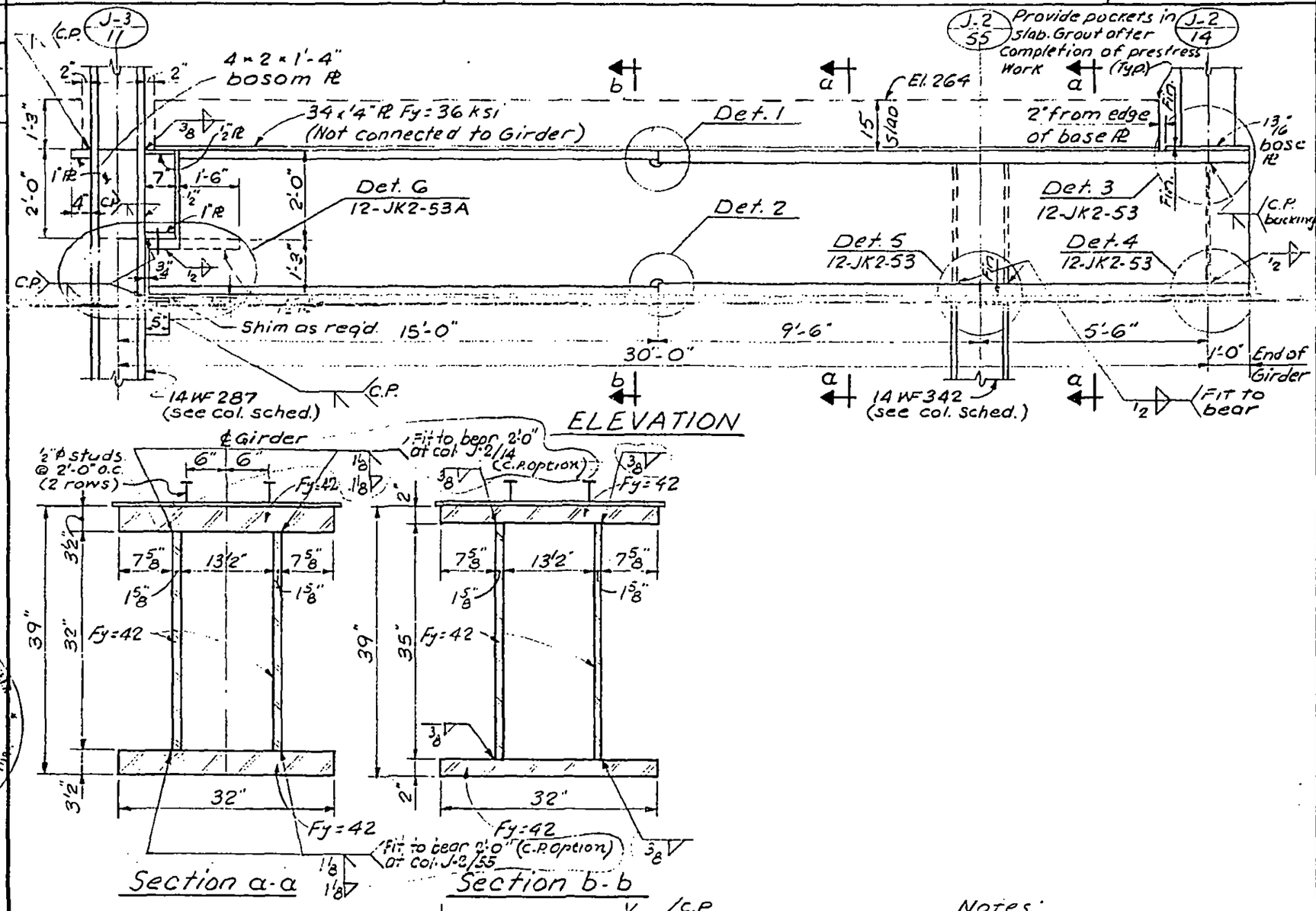

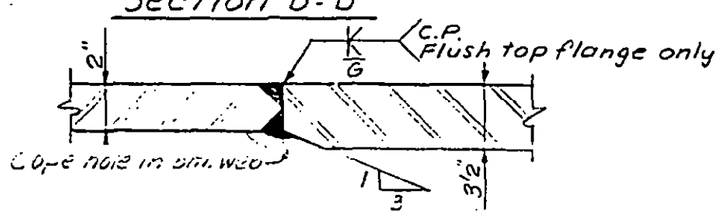

Notes:
1. All welds to be E70xx.
2. All bolts to be A-325 friction type.
3. Col. cap & Detail similar to Detail 104 (10-JK2-7).

12-JK2-52

LICENSED PROFESSIONAL ENGINEER LESLIE E. ROBERTSON NO. 34360 UNIVERSITY OF THE STATE OF NEW YORK

DRAWN S.T.M.
REVIEWED E.L.

SKILLING - HELLE - CHRISTIANSEN - ROBERTSON Structural & Civil Engineers

PROJECT THE WORLD TRADE CENTER | TITLE TYPICAL BEAM TO GIRDER CONNECTION | DATE 10-20-67

REVISIONS

1-5-68

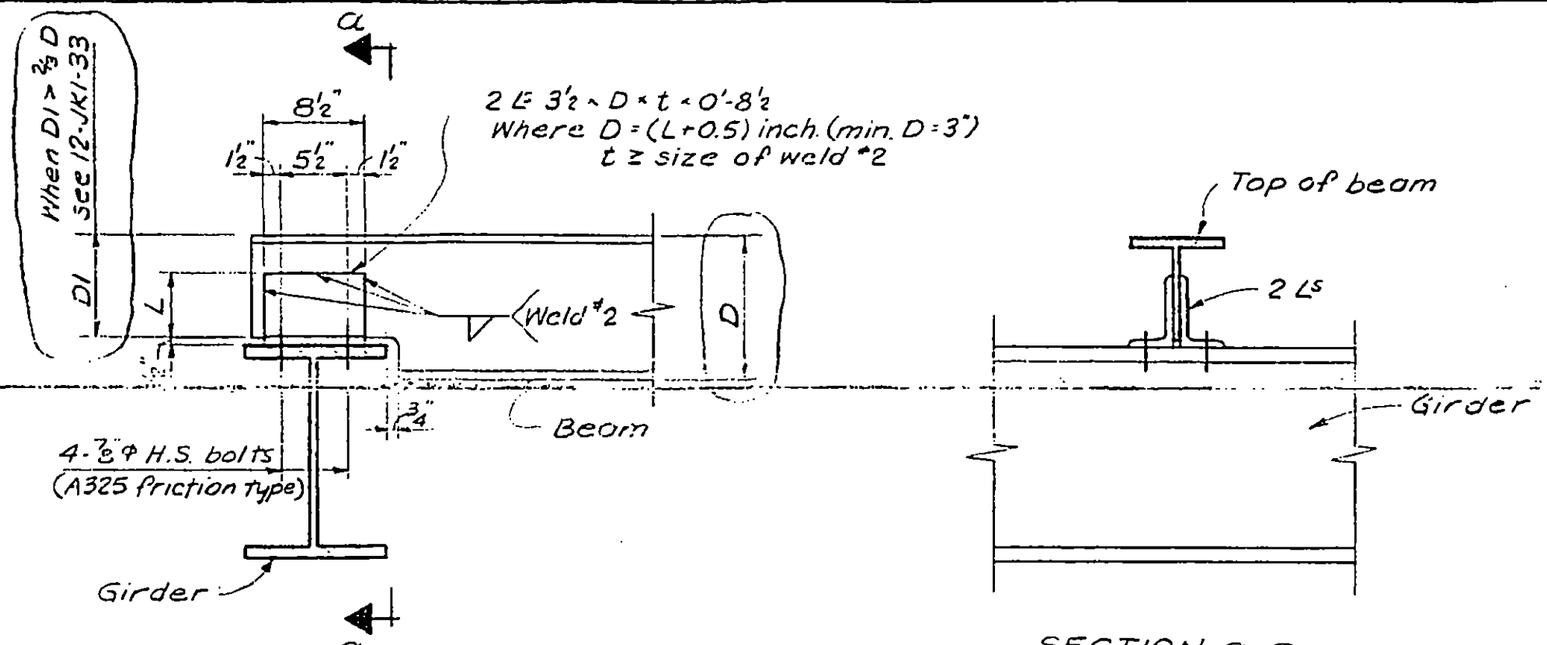

$$L\ (\text{inch.}) = \tfrac{1}{2}\left(\frac{\text{Reaction}}{1.4\,B} - 8.5\right)$$

Min. L = 2½"

Where B = is the number of sixteenths in the weld size

SECTION a-a

WHERE TOP OF BEAM IS MUCH HIGHER THAN TOP OF GIRDER

REGISTERED PROFESSIONAL ENGINEER
LESLIE E. ROBERTSON
No. 34360
STATE OF NEW YORK

12-JK1-32

SKILLING - HELLE - CHRISTIANSEN - ROBERTSON Structural & Civil Engineers

PROJECT THE WORLD TRADE CENTER | TITLE DETAIL OF PLATE GIRDER | DATE 2-29-68

REVISIONS

6-28-68

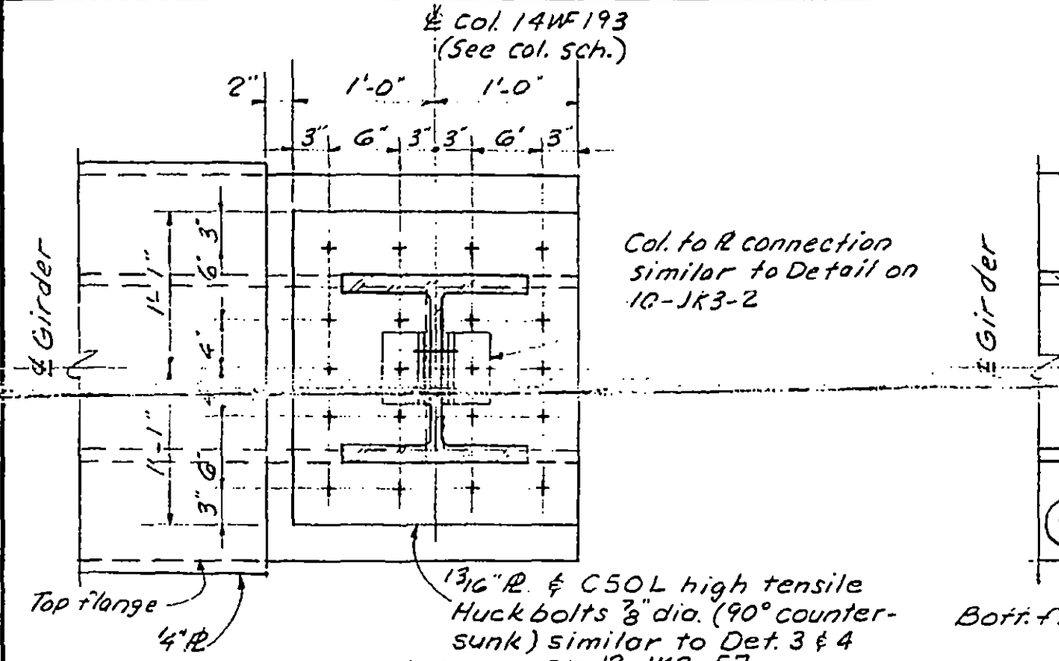

Detail 3

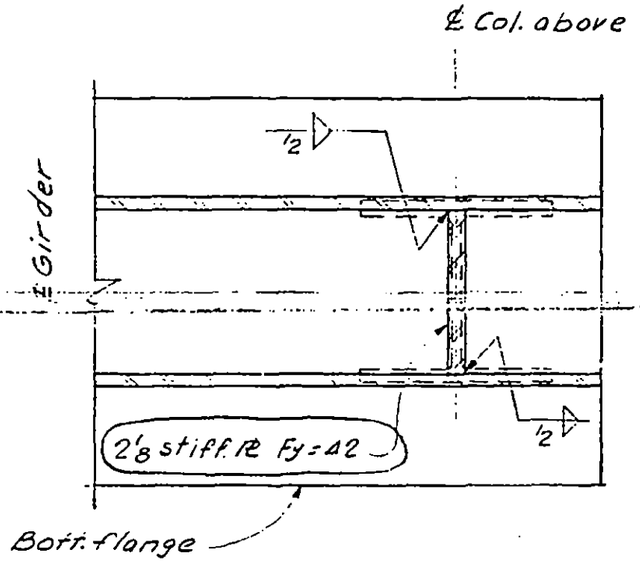

Detail 4

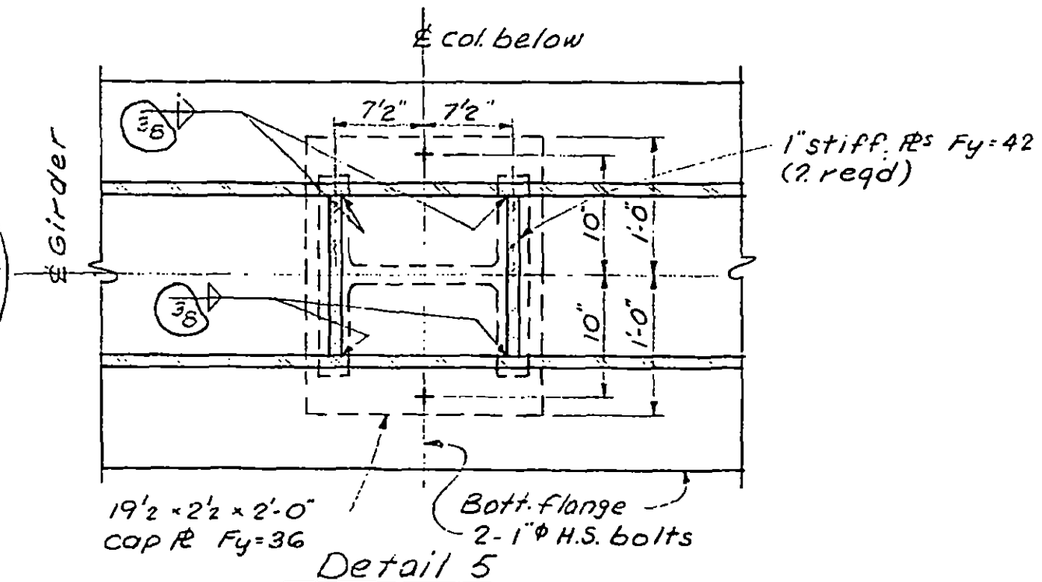

Detail 5

LICENSED PROFESSIONAL ENGINEER
LESLIE E. ROBERTSON
No. 34360
UNIVERSITY OF THE STATE OF NEW YORK

12-JK2-53

SKILLING - HELLE - CHRISTIANSEN - ROBERTSON Structural & Civil Engineers

PROJECT THE WORLD TRADE CENTER | TITLE TYPICAL BEAM TO GIRDER CONNECTION | DATE 1-5-68

REVISIONS

7-19-68

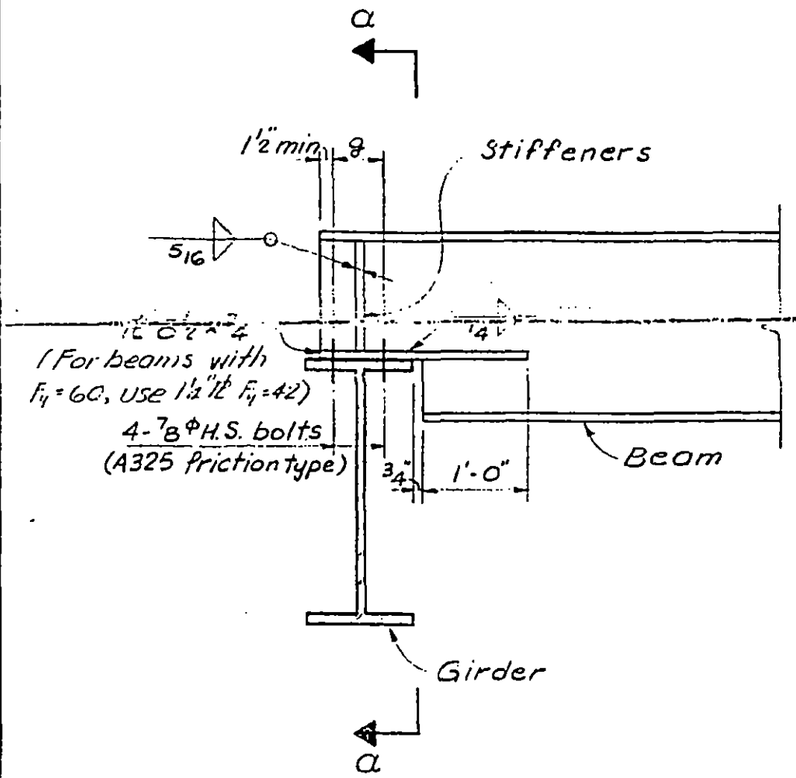

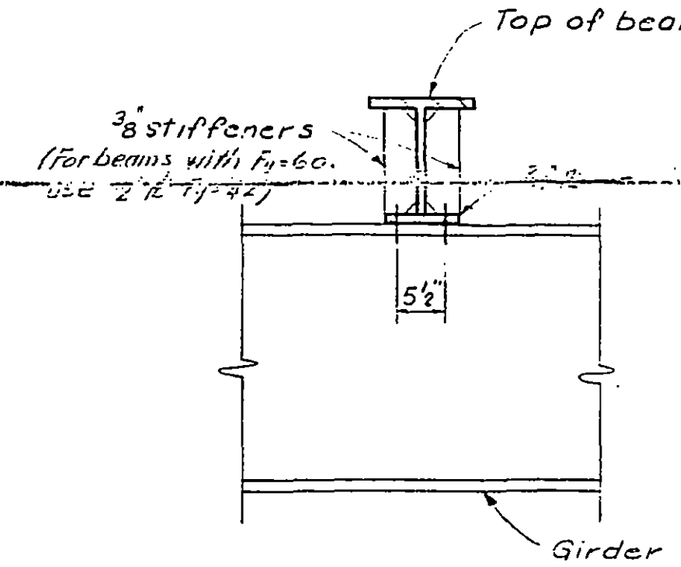

Section a-a

REGISTERED PROFESSIONAL ENGINEER

12-JK1-33

SKILLING - HELLE - CHRISTIANSEN - ROBERTSON Structural & Civil Engineers

PROJECT THE WORLD TRADE CENTER | TITLE TYPICAL BEAM TO GIRDER CONNECTION | DATE 1-5-68

REVISIONS

7-19-68

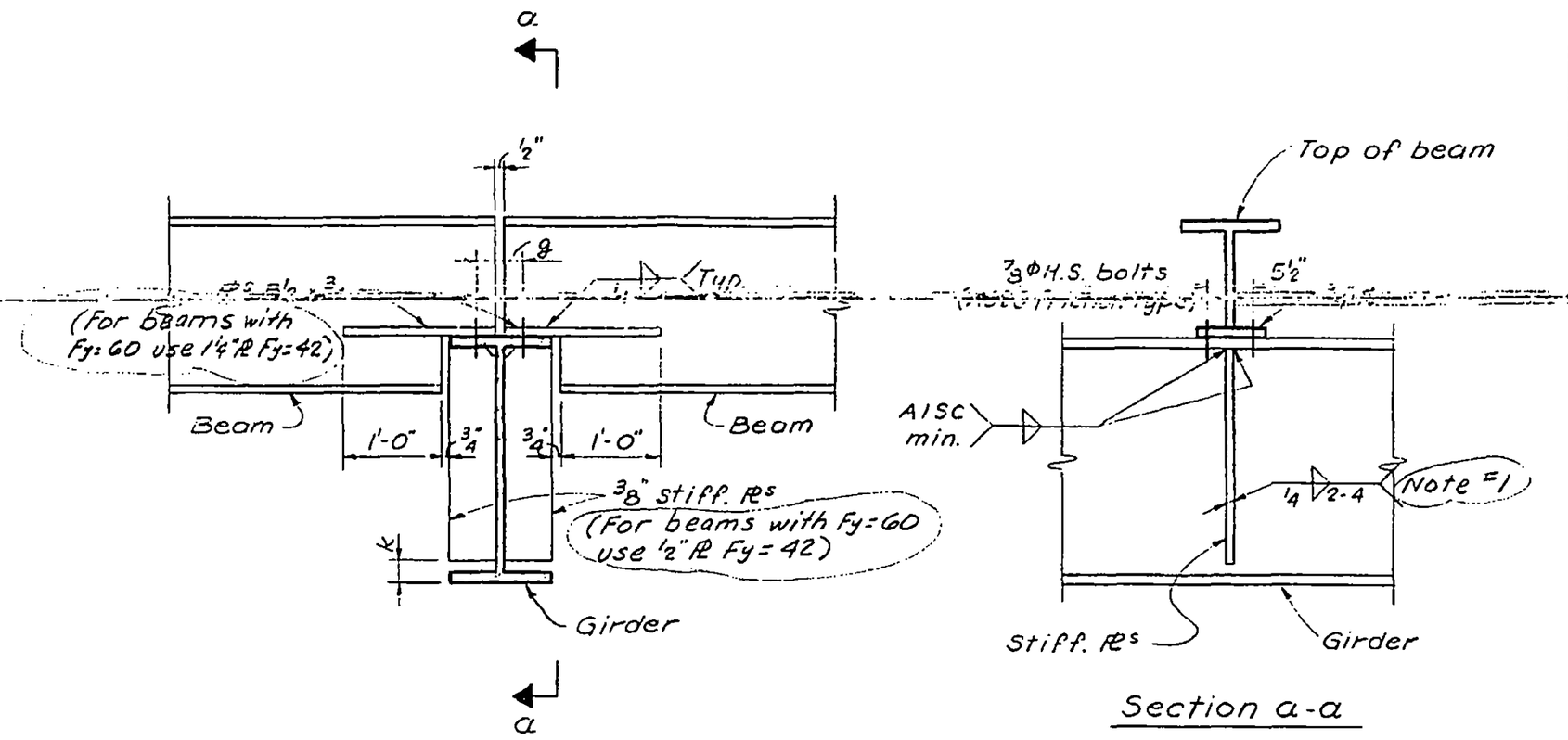

Section a-a

Note:
1. For beams with Fy=60 use 5/16 weld.

12-JK1-34

SKILLING - HELLE - CHRISTIANSEN - ROBERTSON Structural & Civil Engineers

PROJECT THE WORLD TRADE CENTER | TITLE DETAIL OF PLATE GIRDER | DATE 2-29-68

REVISIONS

6-28-68

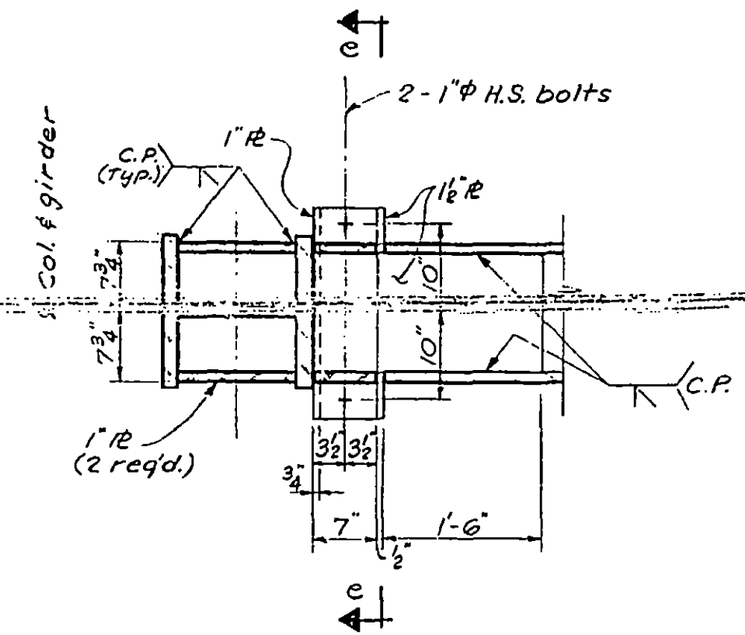

Detail 6

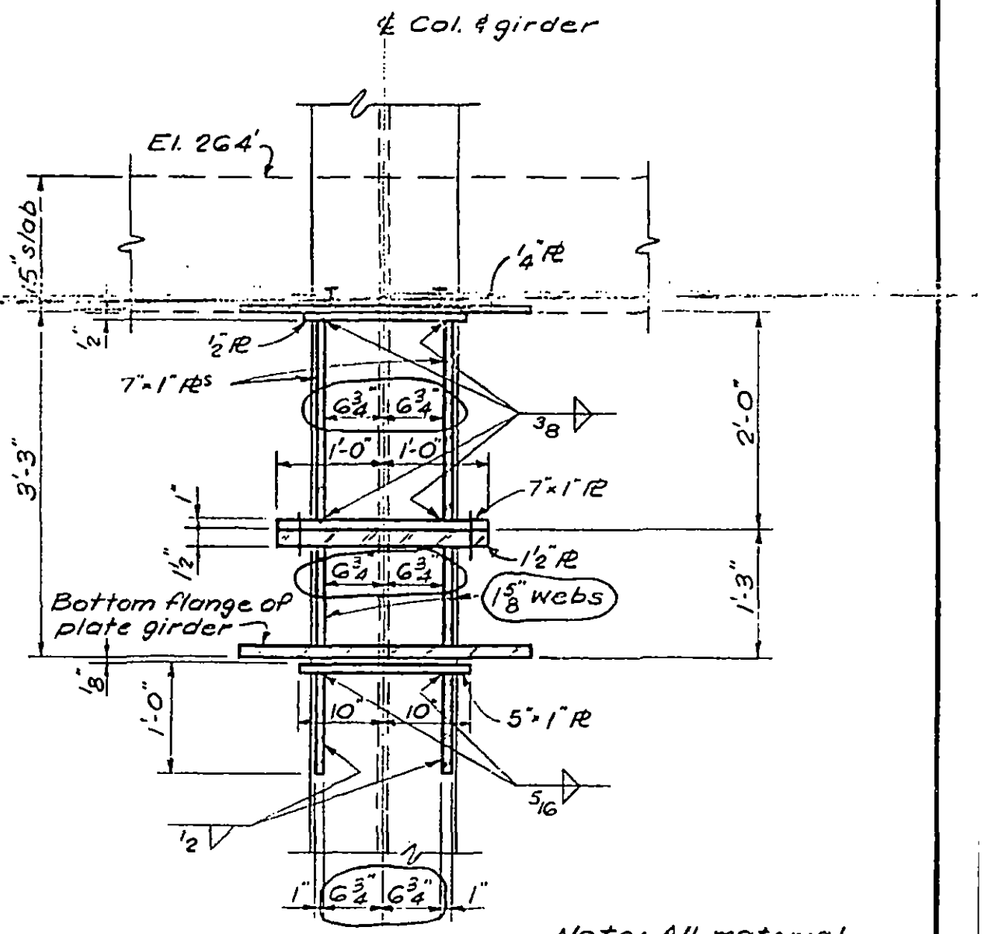

Section e-e

Note: All material Fy = 42 K.S.I.

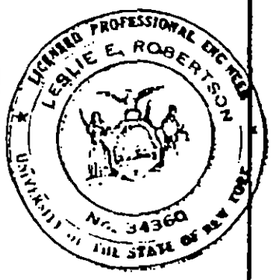

12-JK2-53A

SKILLING - HELLE - CHRISTIANSEN - ROBERTSON Structural & Civil Engineers

PROJECT THE WORLD TRADE CENTER | TITLE DETAIL OF PLATE GIRDER | DATE 2-29-68

REVISIONS
4-5-68
6-28-68
1-3-69

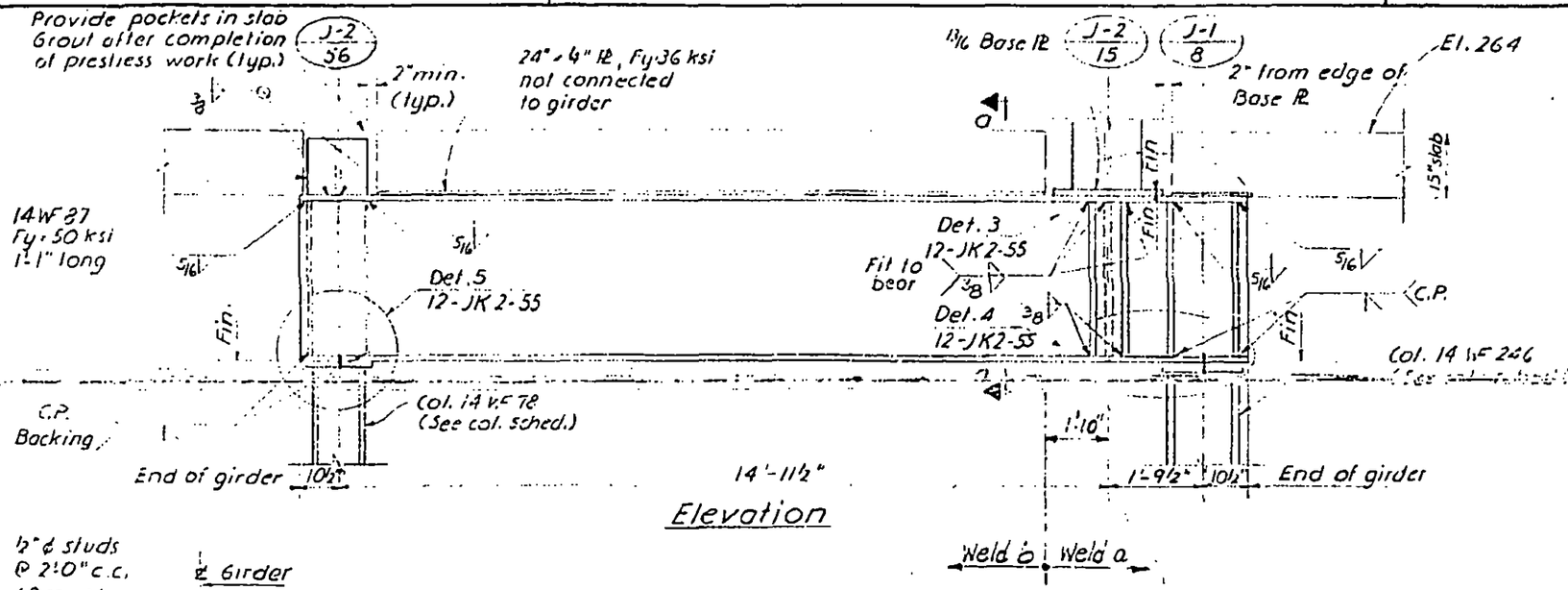

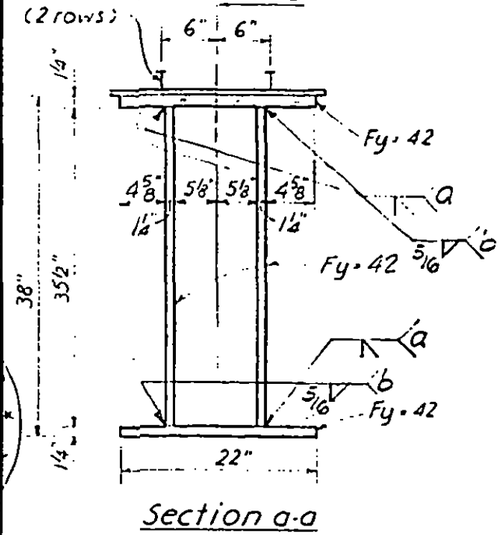

Section a-a

Note:
1. All welds to be E70XX.
2. All bolts to be A325 friction type.
3. Col. cap PL detail similar to Det. 104 (12-JK2-1)

LICENSED PROFESSIONAL ENGINEER
LESLIE E. ROBERTSON
No. 34360
UNIVERSITY OF THE STATE OF NEW YORK

DRAWN
S.T.M.
REVIEWED
E.L.

12-JK2-54

SKILLING - HELLE - CHRISTIANSEN - ROBERTSON Structural & Civil Engineers

PROJECT: THE WORLD TRADE CENTER | TITLE: DETAIL OF PLATE GIRDER | DATE: 2-29-68

REVISIONS
6-28-68

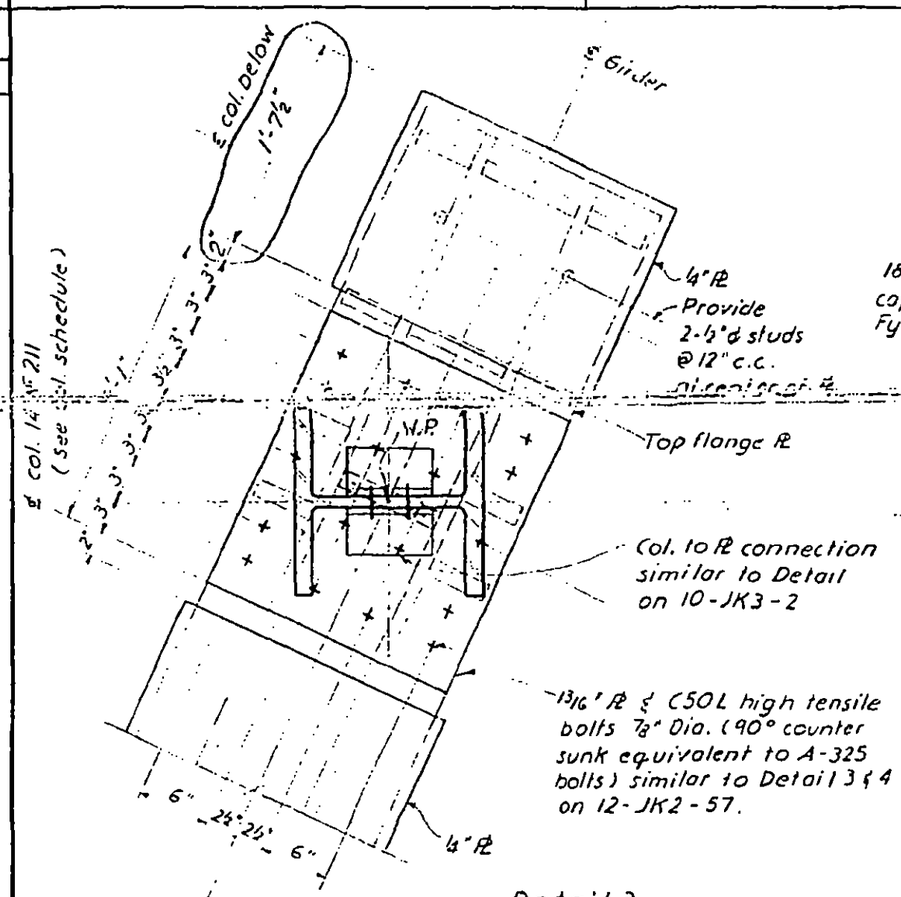

Detail 3

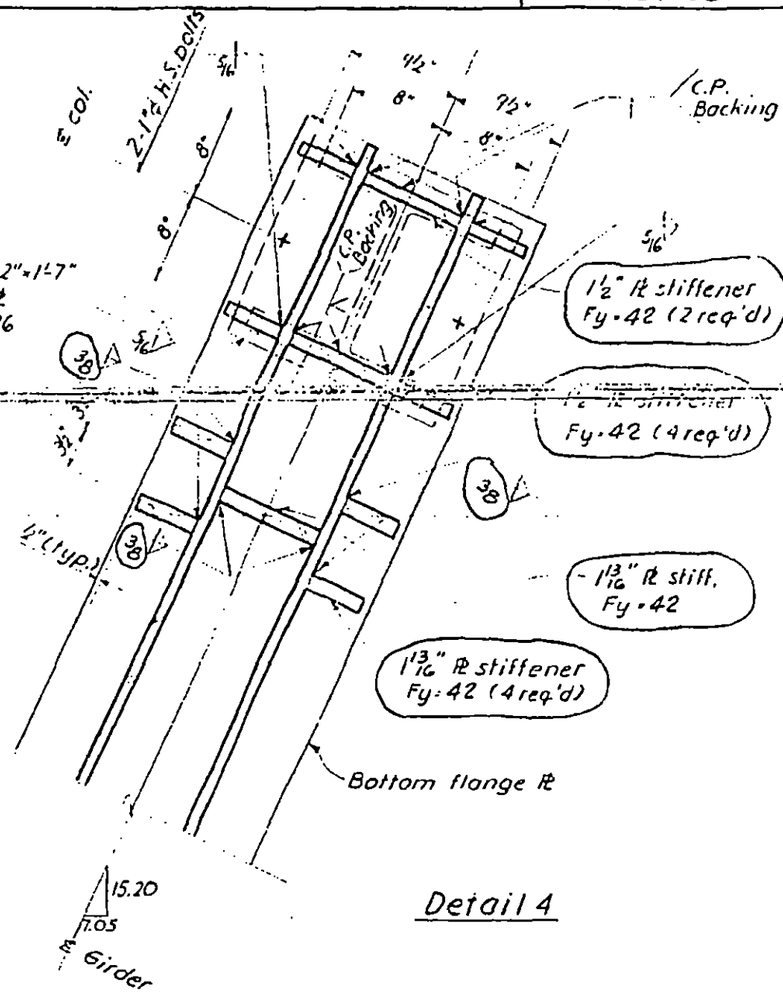

Detail 4

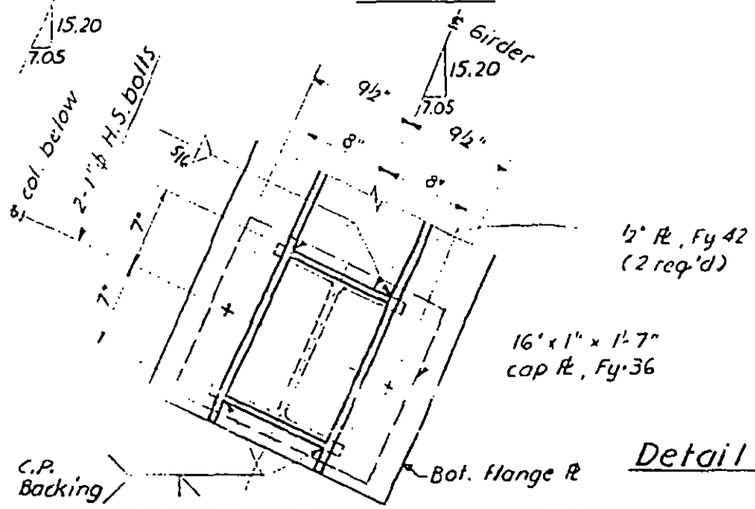

Detail 5

LICENSED PROFESSIONAL ENGINEER
LESLIE E. ROBERTSON
No. 34360
THE STATE OF NEW YORK

12-JK2-55

SKILLING - HELLE - CHRISTIANSEN - ROBERTSON Structural & Civil Engineers

PROJECT THE WORLD TRADE CENTER | TITLE DETAIL OF PLATE GIRDER | DATE 2-29-68

REVISIONS
6-28-68
1-3-69

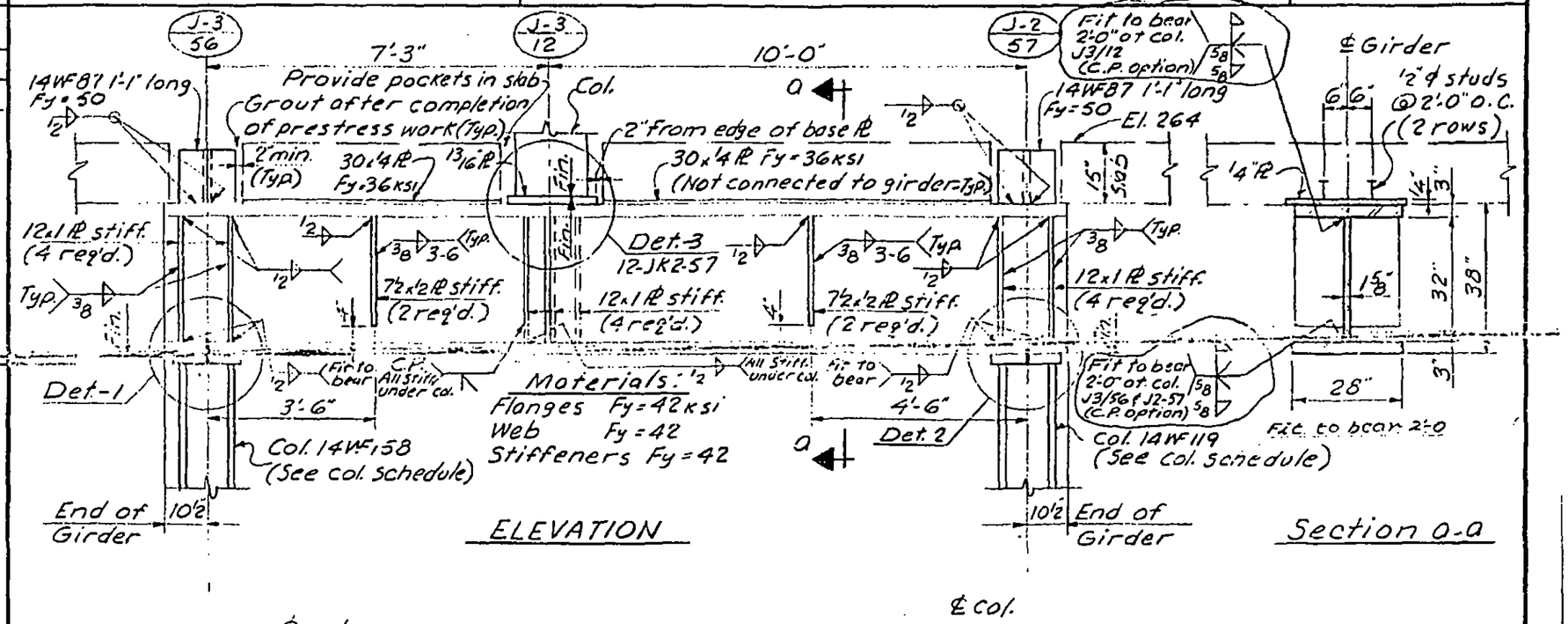

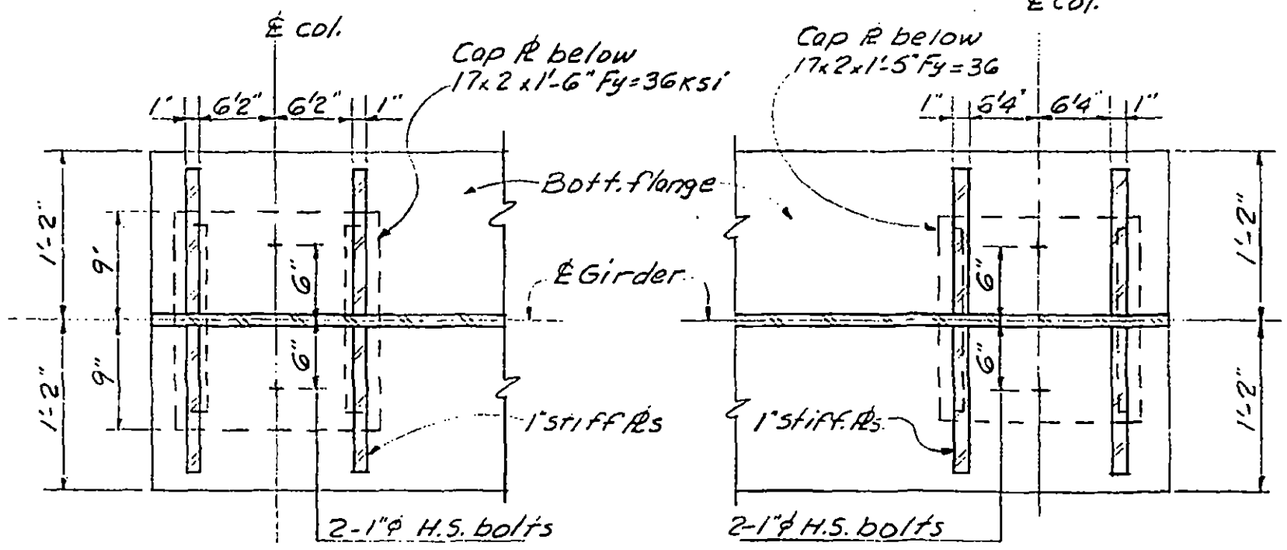

Notes:
1. All welds to be E70XX
2. All bolts to be A-325 friction type.
3. Col. cap Pl Detail similar to Detail 104 (10-JK2-7.)

LICENSED PROFESSIONAL ENGINEER LESLIE E. ROBERTSON No. 34360 STATE OF NEW YORK

DRAWN S.T.M.
REVIEWED E.L.

12-JK2-56

SKILLING - HELLE - CHRISTIANSEN - ROBERTSON Structural & Civil Engineers

PROJECT THE WORLD TRADE CENTER | TITLE DETAIL OF PLATE GIRDER | DATE 2-29-68

REVISIONS

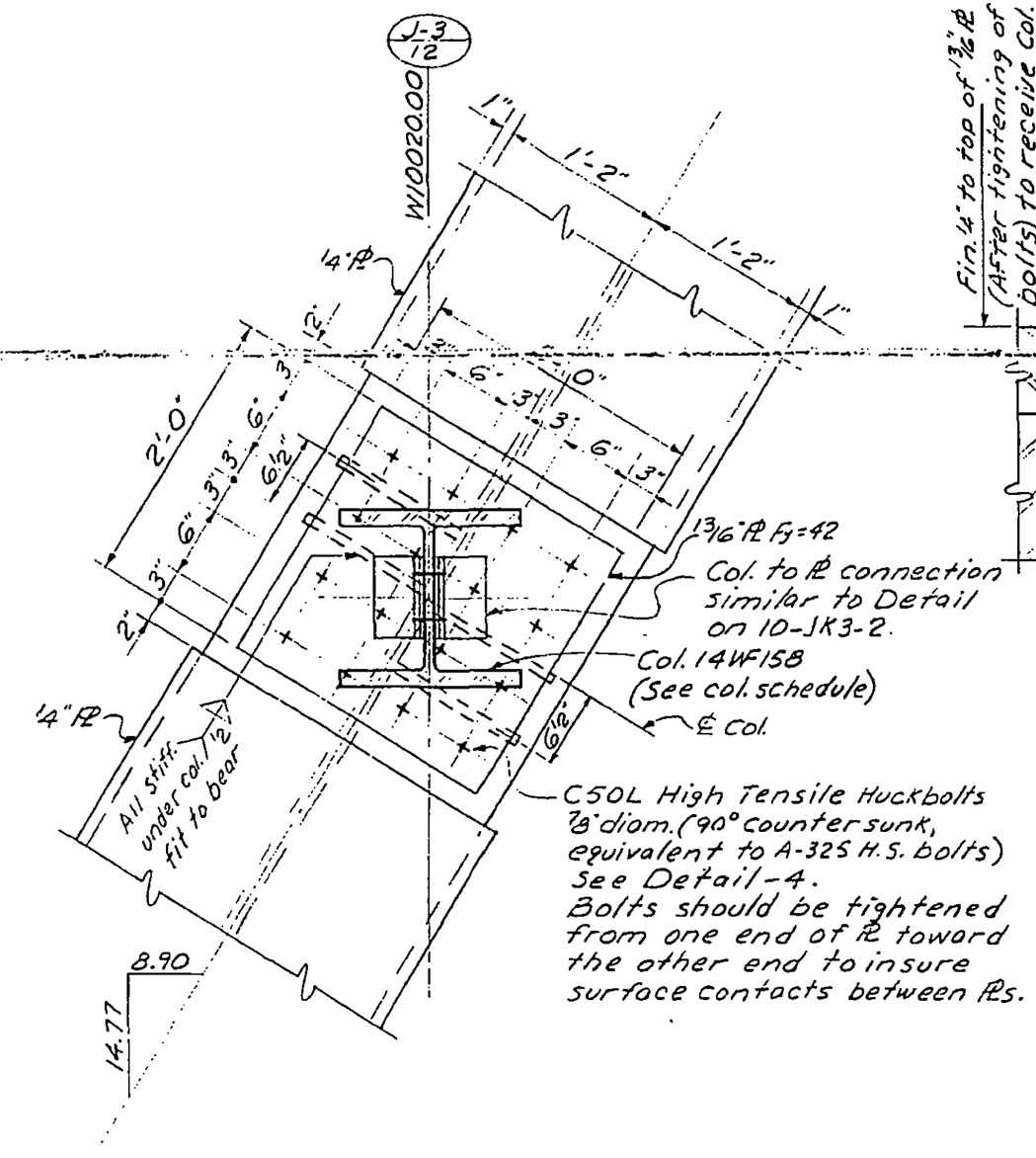

Detail - 3

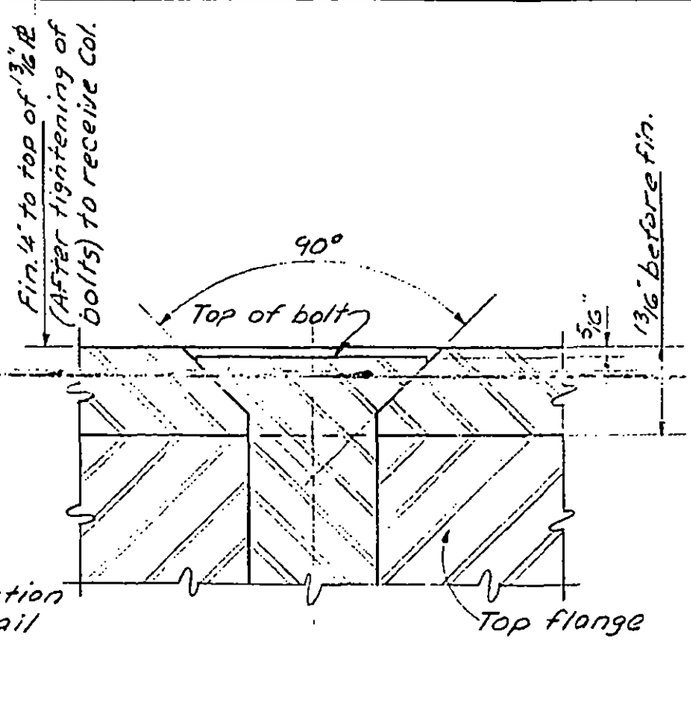

Detail - 4

LICENSED PROFESSIONAL ENGINEER
LESLIE E. ROBERTSON
No. 34360
UNIVERSITY OF THE STATE OF NEW YORK

12-JK2-57

SKILLING - HELLE - CHRISTIANSEN - ROBERTSON Structural & Civil Engineers

PROJECT THE WORLD TRADE CENTER | TITLE DETAIL OF PLATE GIRDER | DATE 2-29-68

REVISIONS
6-28-68
1-3-69

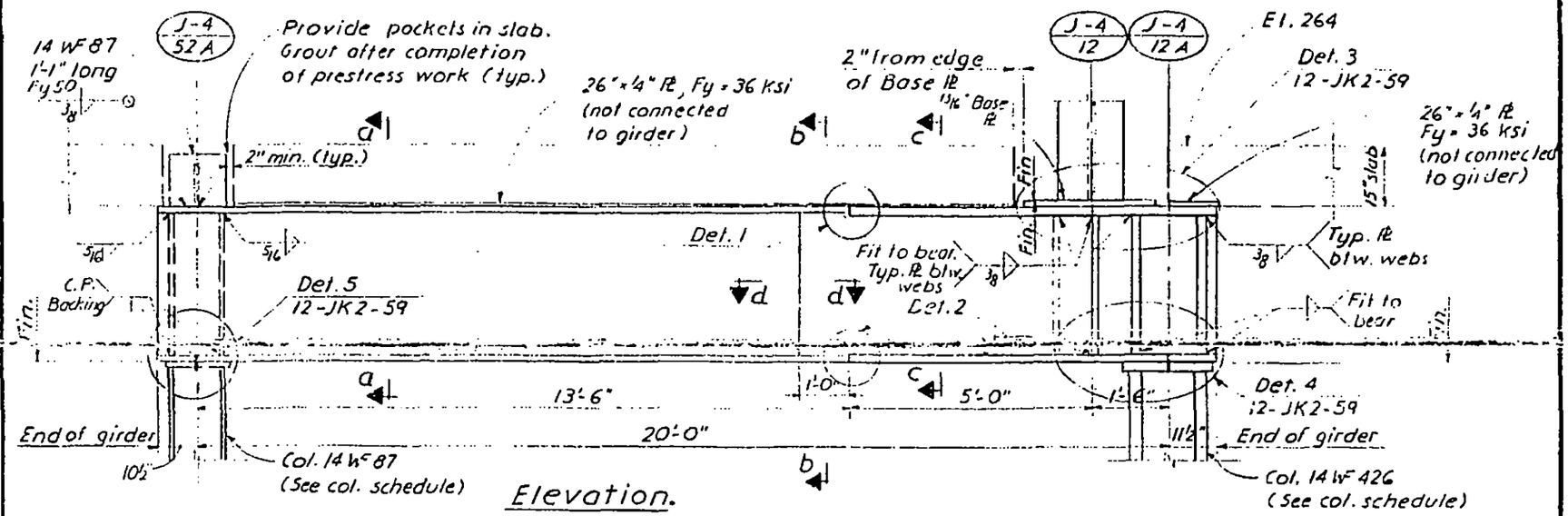

Elevation.

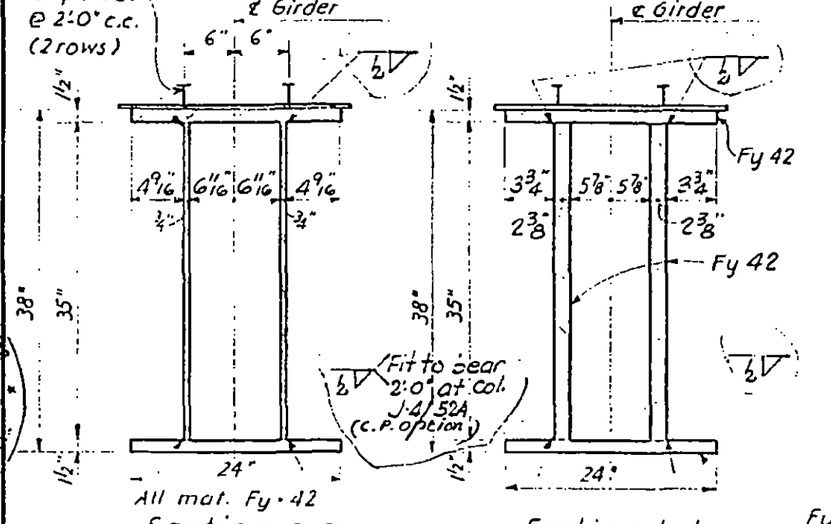

Section a-a

Section b-b

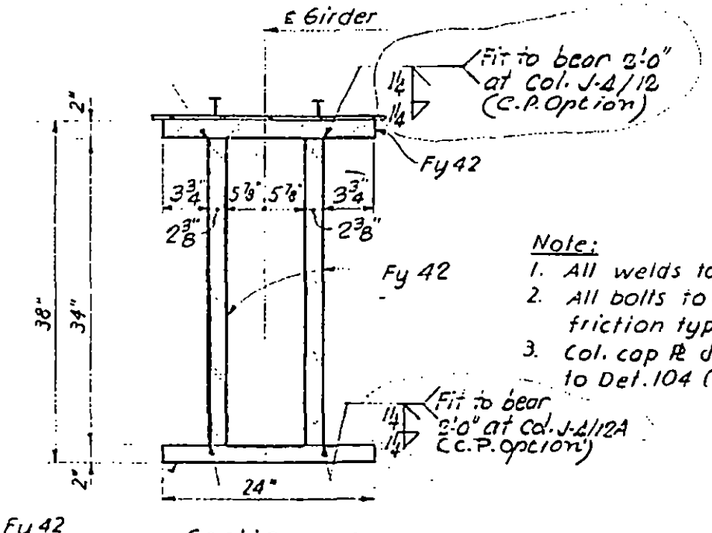

Section c-c

Note:
1. All welds to be E70xx.
2. All bolts to be A-325 friction type.
3. Col. cap Pl detail similar to Det. 104 (10-JK2-7)

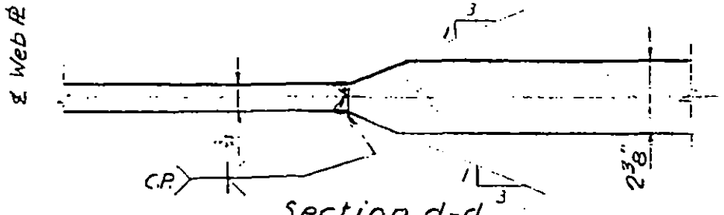

Section d-d

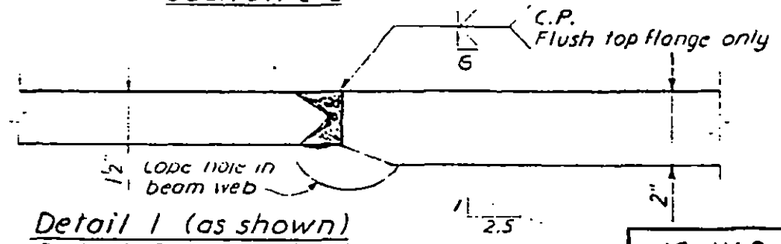

Detail 1 (as shown)
Detail 2 (reflected)

LICENSED PROFESSIONAL ENGINEER LESLIE E. ROBERTSON No. 34360 REGISTERED IN THE STATE OF NEW YORK

DRAWN S.T.M.
REVIEWED E.L.

12-JK2-58

SKILLING - HELLE - CHRISTIANSEN - ROBERTSON Structural & Civil Engineers

PROJECT THE WORLD TRADE CENTER | TITLE DETAIL OF PLATE GIRDER | DATE 2-29-68

REVISIONS

6-28-68

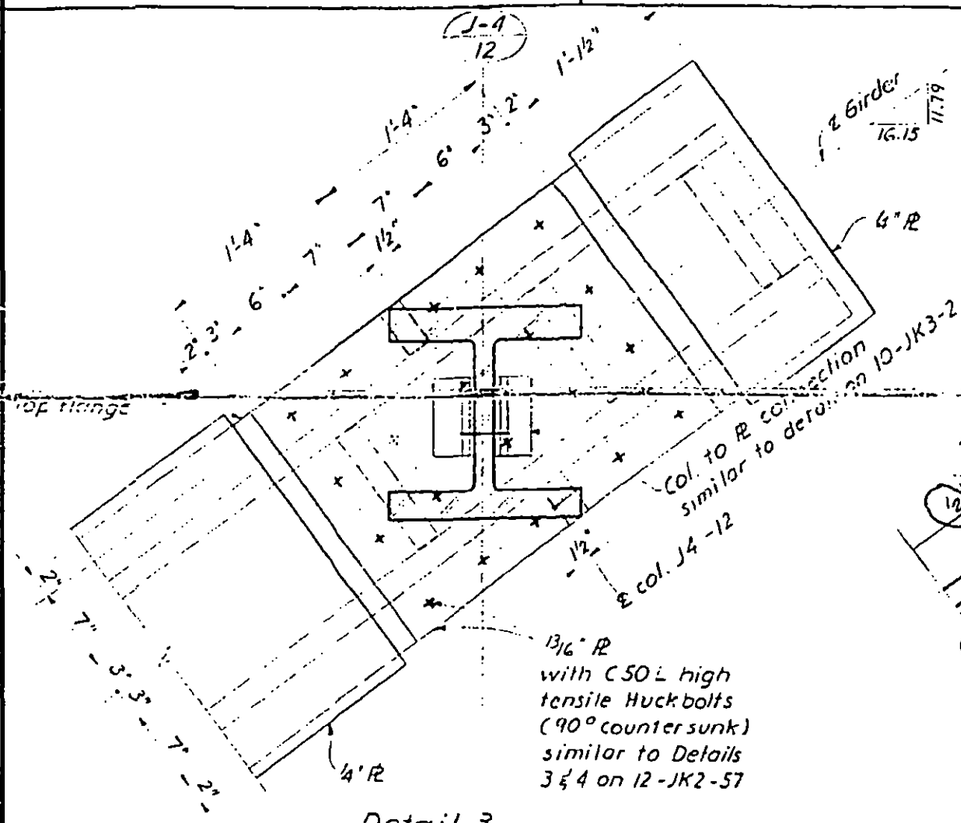

Detail 3

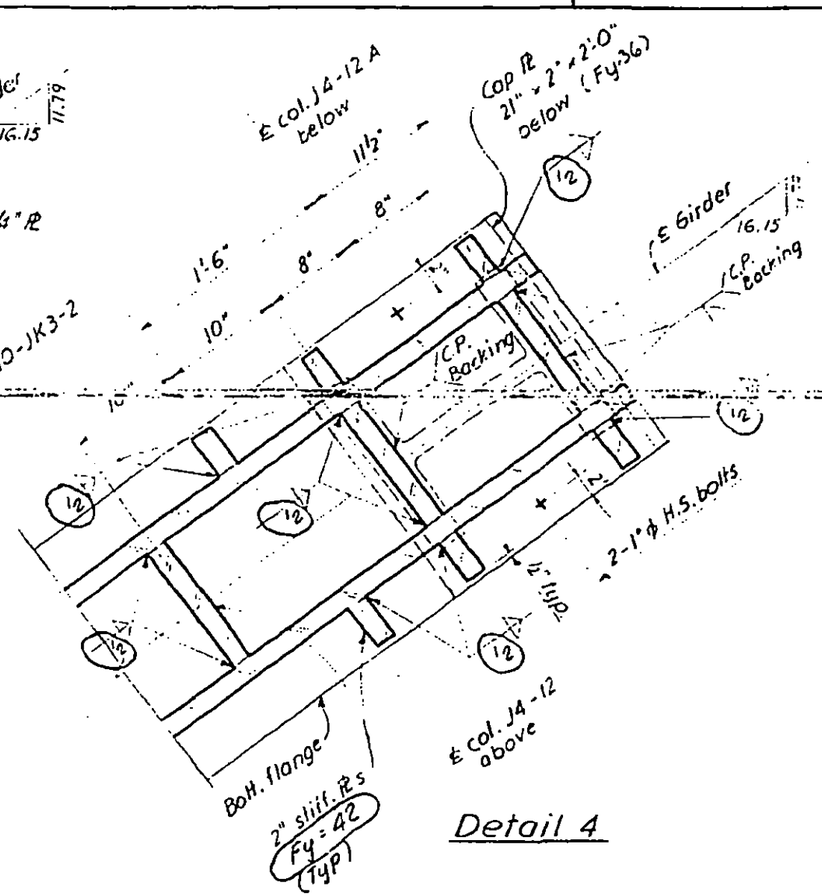

Detail 4

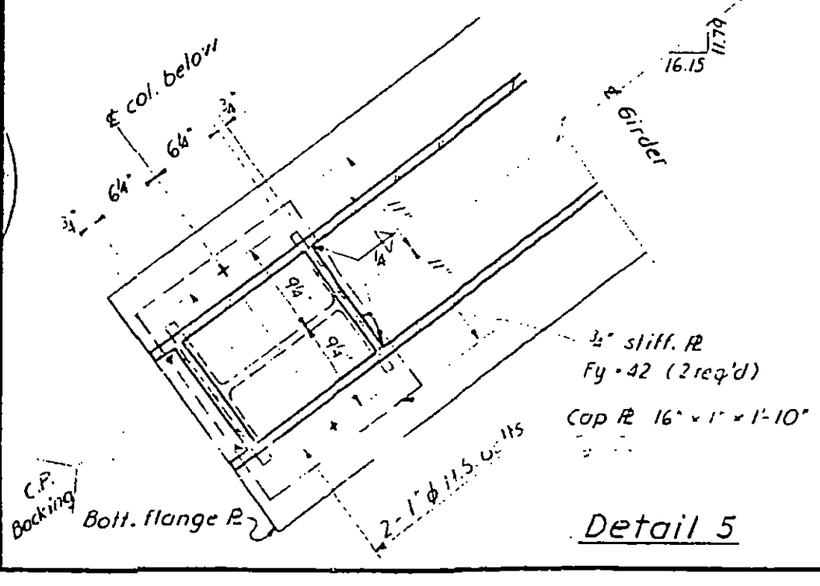

Detail 5

LICENSED PROFESSIONAL ENGINEER LESLIE E. ROBERTSON No. 14360 STATE OF NEW YORK

12-JK2-59

SKILLING - HELLE - CHRISTIANSEN - ROBERTSON Structural & Civil Engineers

PROJECT THE WORLD TRADE CENTER | TITLE DETAIL OF PLATE GIRDER | DATE 2-29-68

REVISIONS
6-28-68
1-3-69

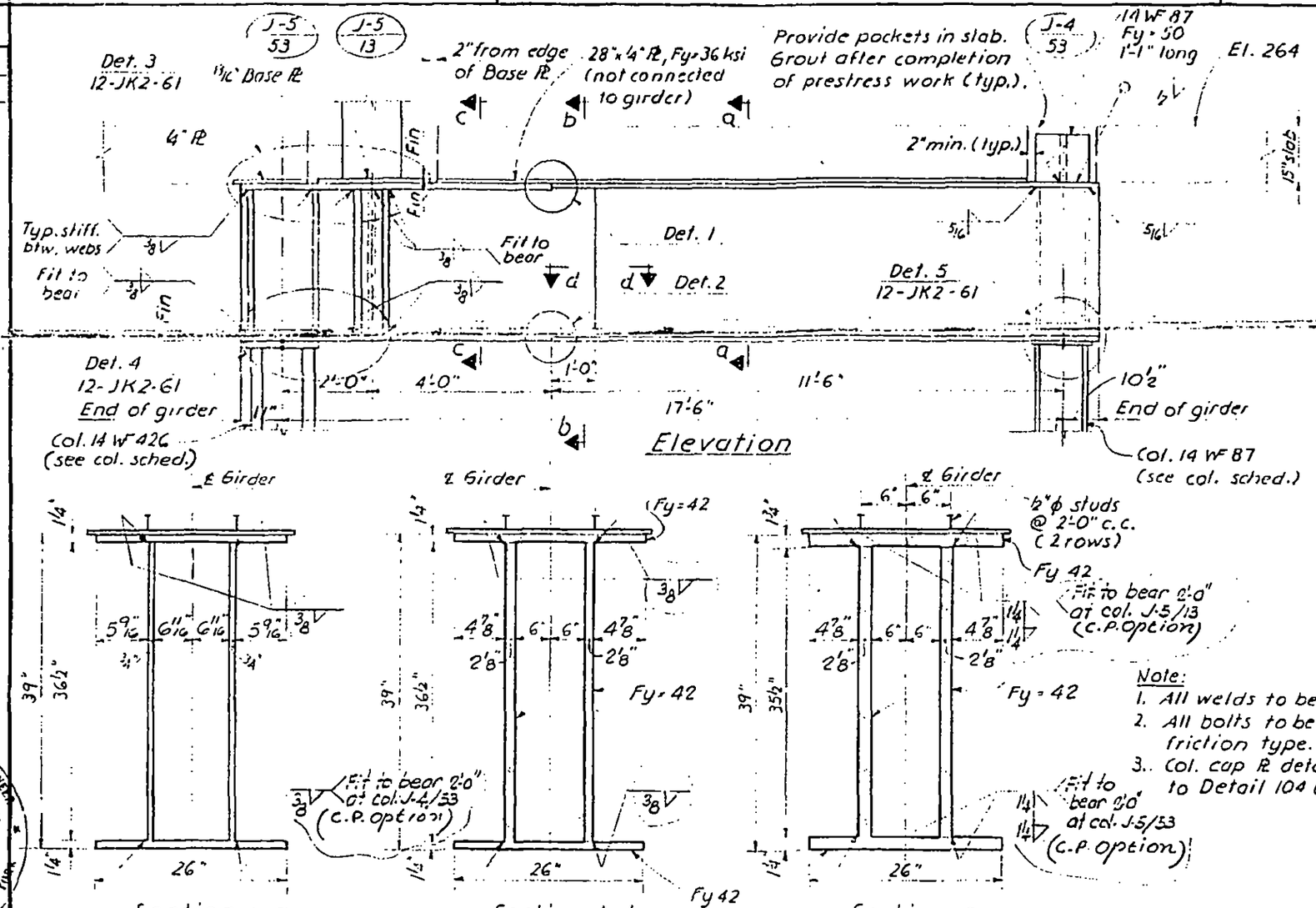

Note:
1. All welds to be E70XX
2. All bolts to be A-325 friction type.
3. Col. cap Pl detail similar to Detail 104 (10-JK2-7)

LICENSED PROFESSIONAL ENGINEER
LESLIE E. ROBERTSON
No. 34360
UNIVERSITY OF THE STATE OF NEW YORK

DRAWN S.T.M.
REVIEWED E.L.

12-JK2-60

SKILLING - HELLE - CHRISTIANSEN - ROBERTSON Structural & Civil Engineers

PROJECT THE WORLD TRADE CENTER | TITLE DETAIL OF PLATE GIRDER | DATE 2-29-68

REVISIONS

6-28-68

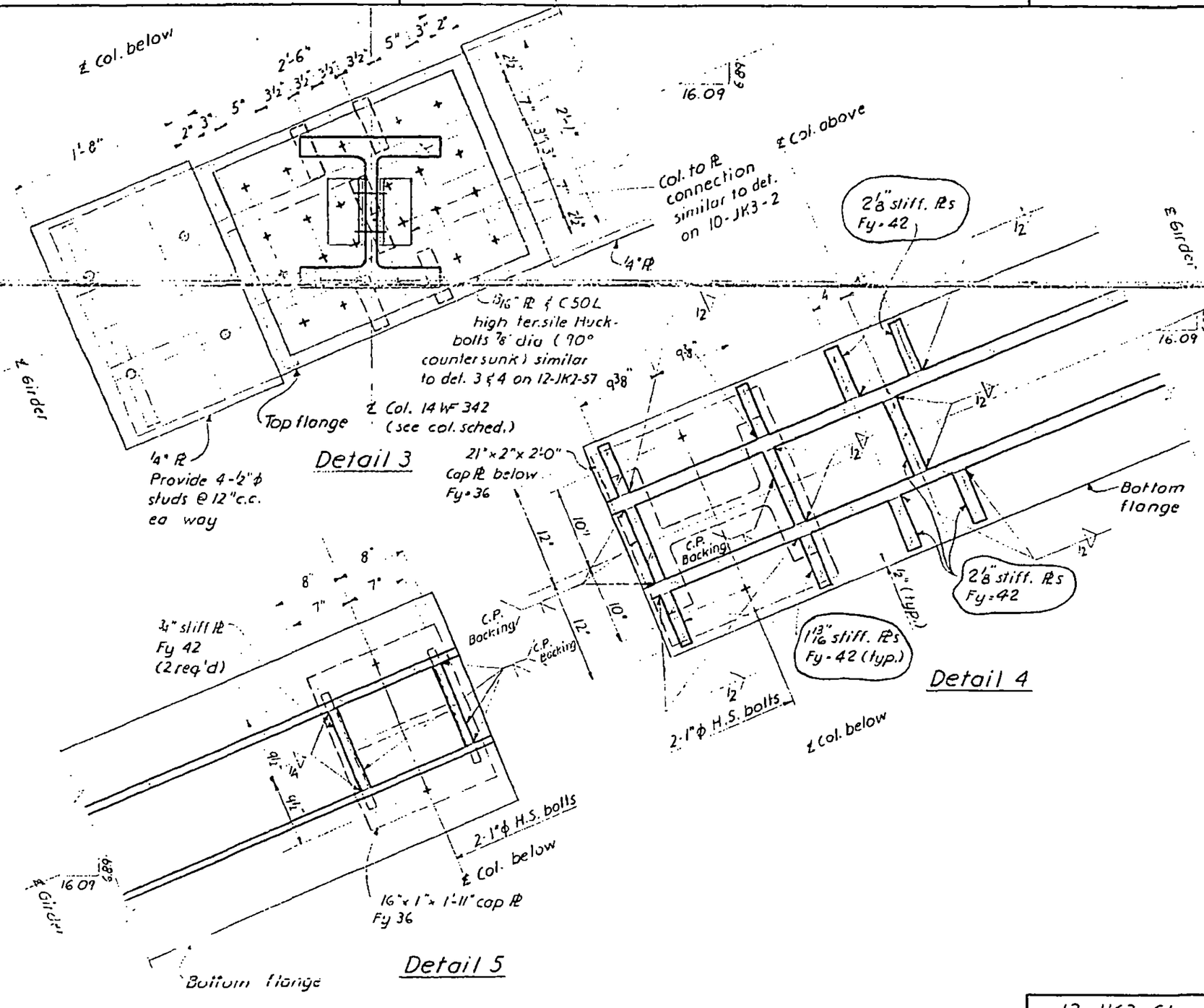

LICENSED PROFESSIONAL ENGINEER
LESLIE E. ROBERTSON
No. 34360
REGISTERED IN THE STATE OF NEW YORK

12-JK2-61

SKILLING - HELLE - CHRISTIANSEN - ROBERTSON Structural & Civil Engineers

PROJECT THE WORLD TRADE CENTER | TITLE DETAIL OF PLATE GIRDER | DATE 5-1-68

REVISIONS
6-7-68
7-19-68
1-3-69

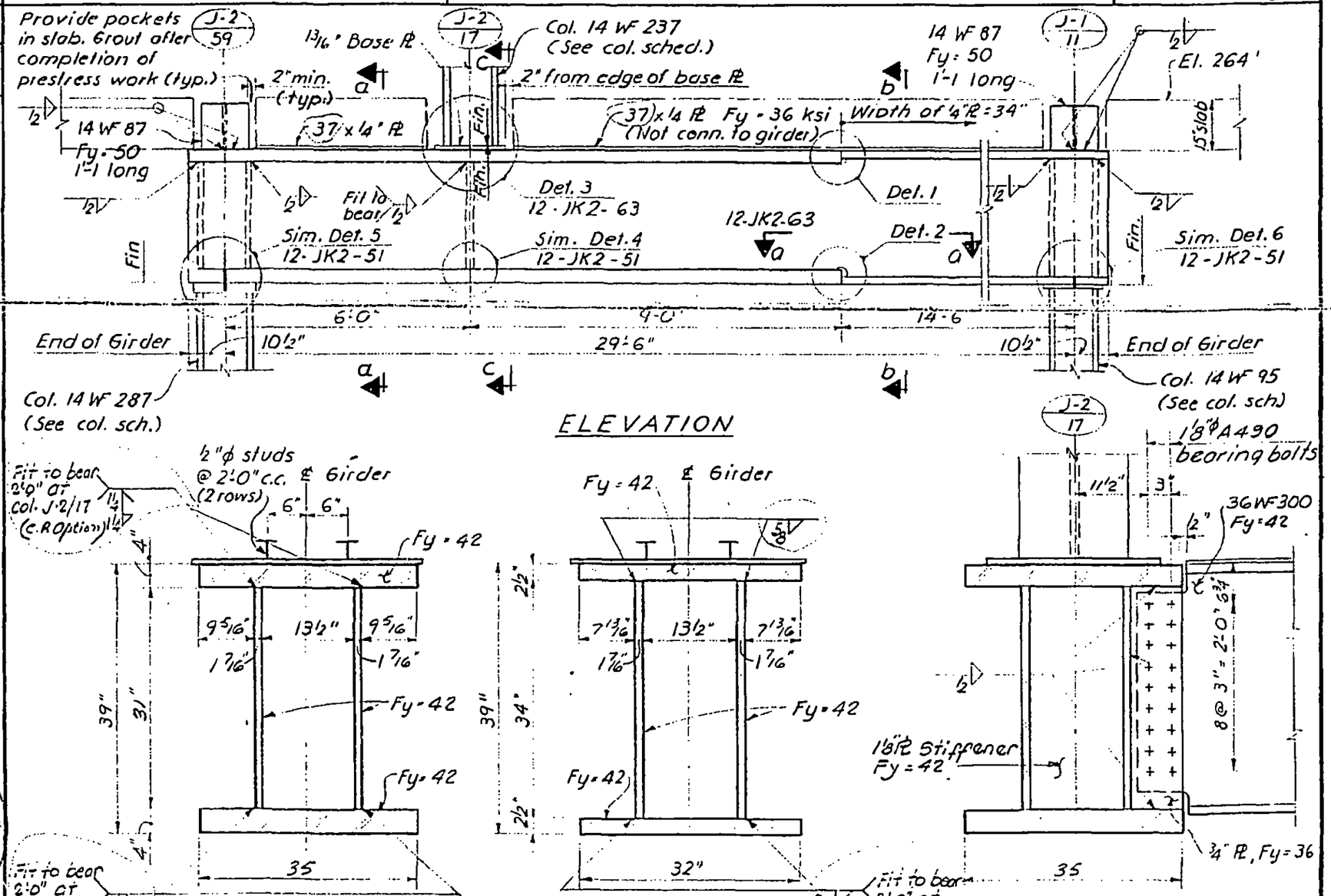

Detail 1 (as shown)
Detail 2 (reflected)

Note:
1. All welds to be E 70 xx
2. All bolts to be A325 friction type, unless noted.
3. Col. cap Pl Detail similar to Detail 104 (10-JK2-7)

DRAWN S.T.M.
REVIEWED E.L.

12-JK2-62

LICENSED PROFESSIONAL ENGINEER LESLIE E. ROBERTSON No. 34370 REGISTERED BY THE STATE OF NEW YORK

SKILLING - HELLE - CHRISTIANSEN - ROBERTSON Structural & Civil Engineers

PROJECT THE WORLD TRADE CENTER | TITLE DETAIL OF PLATE GIRDER | DATE 5-1-68

REVISIONS

7-19-68

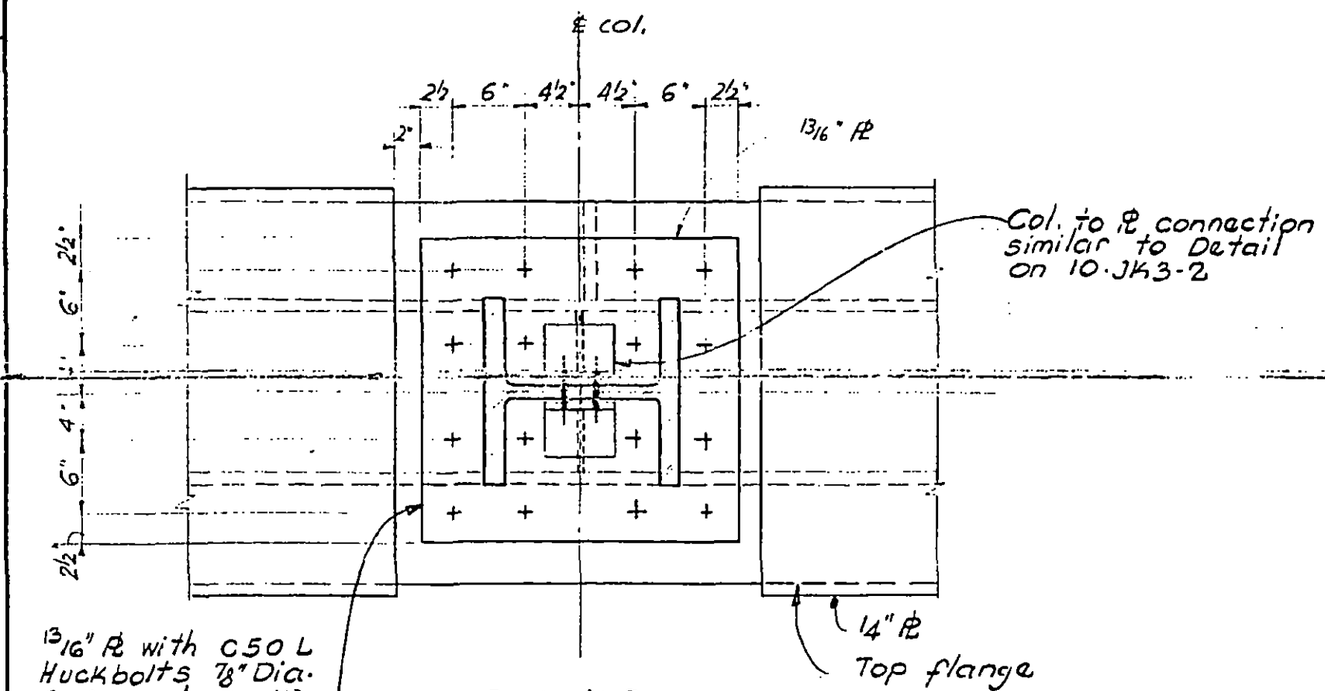

Detail 3

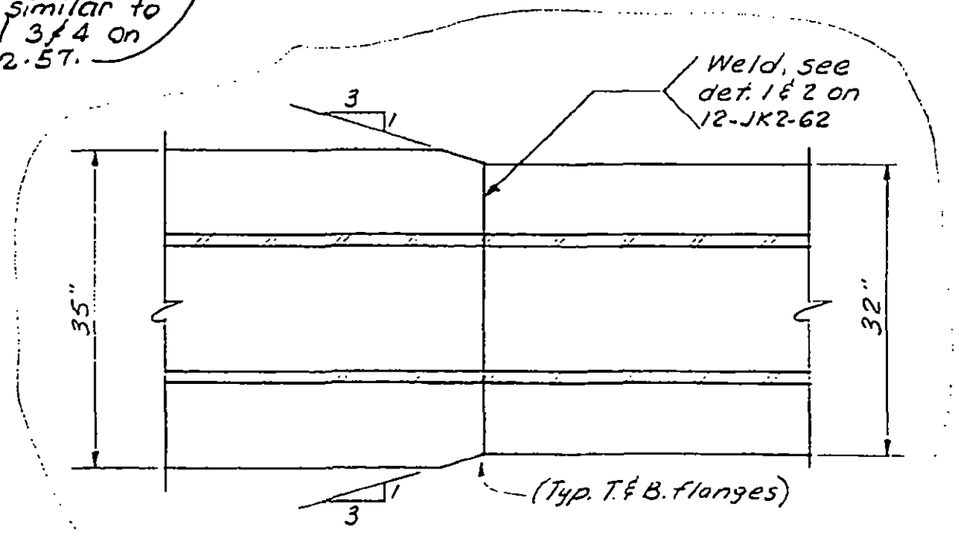

Section a-a

LICENSED PROFESSIONAL ENGINEER
LESLIE E. ROBERTSON
No. 34360
UNIVERSITY OF THE STATE OF NEW YORK

12-JK2-63

SKILLING - HELLE - CHRISTIANSEN - ROBERTSON Structural & Civil Engineers

PROJECT THE WORLD TRADE CENTER | TITLE DETAIL OF PLATE GIRDER | DATE 5-1-68

REVISIONS
6-7-68
7-19-68
1-3-69

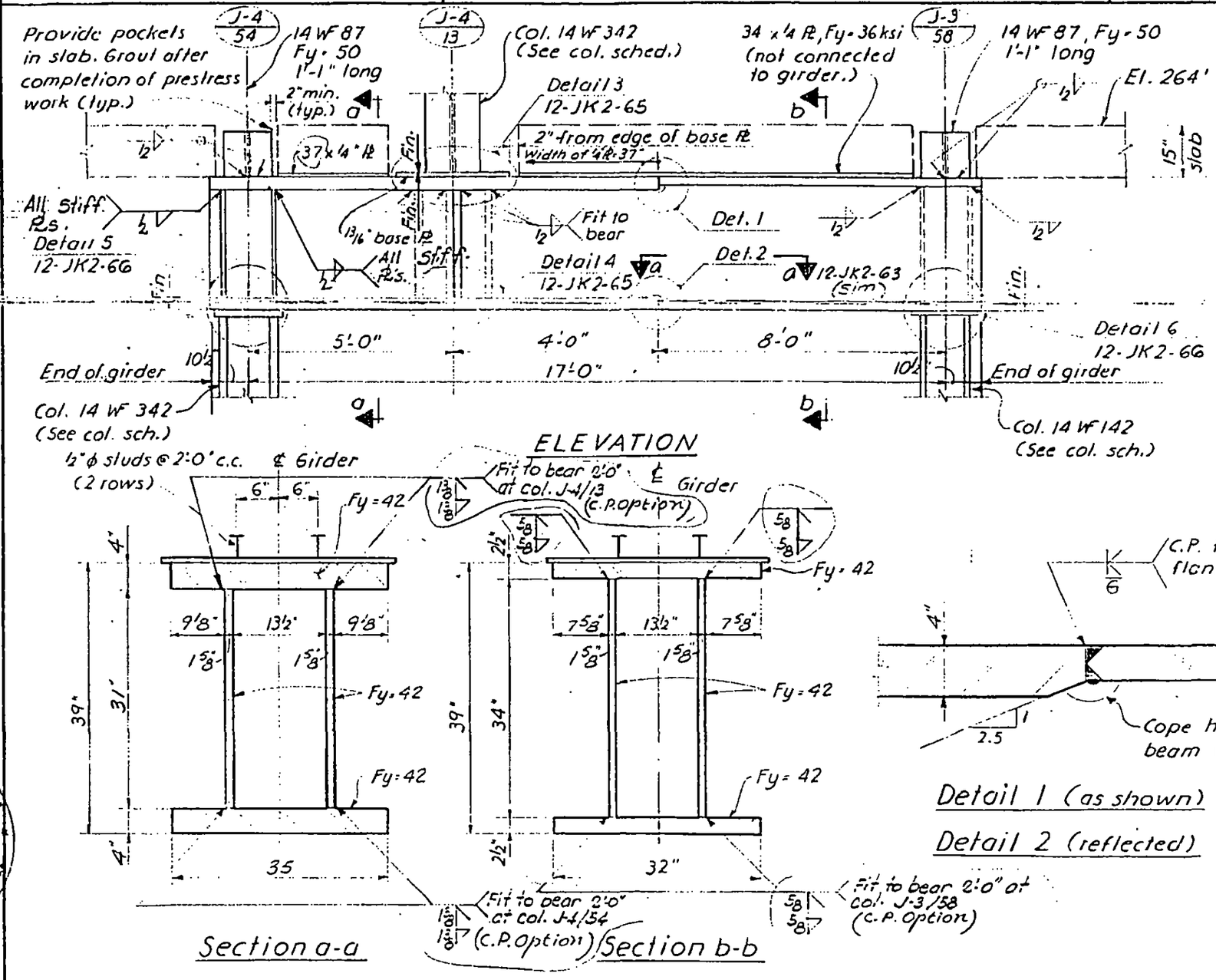

Note:
1. All welds to be E 70 xx
2. All bolts to be A-325 friction type.
3. Col. cap PL Detail similar to Detail 104 (10-JK2-7)

LICENSED PROFESSIONAL ENGINEER LESLIE E. ROBERTSON No. 34360 UNIVERSITY OF THE STATE OF NEW YORK

DRAWN S.T.M.
REVIEWED E.L.

12-JK2-64

SKILLING - HELLE - CHRISTIANSEN - ROBERTSON Structural & Civil Engineers

PROJECT THE WORLD TRADE CENTER | TITLE TYP. DET. OF BEAM SUPPORT OVER TOP OF PERIMETER WALL | DATE 2-9-68

REVISIONS

5-1-68
6-7-68
6-28-68

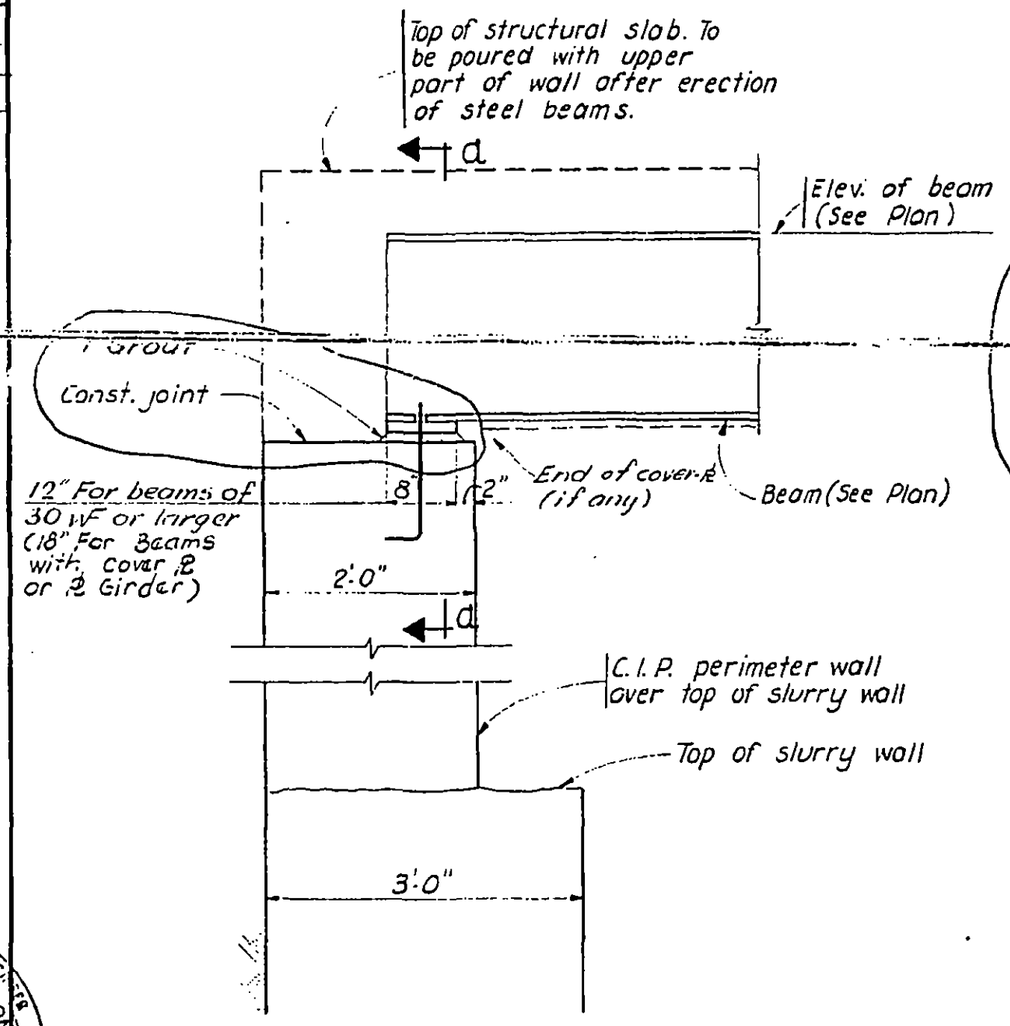

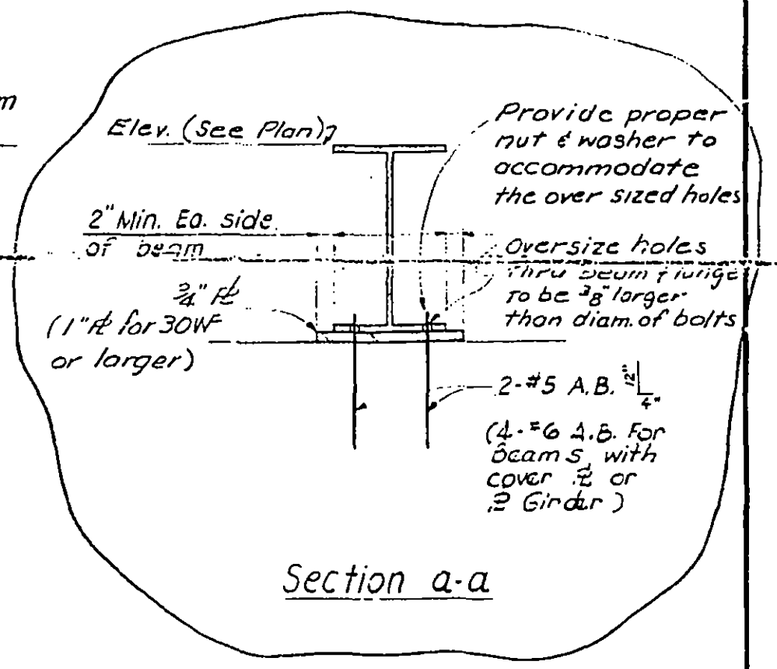

Section a-a

LICENSED PROFESSIONAL ENGINEER
LESLIE E. ROBERTSON
No. 34360
UNIVERSITY OF THE STATE OF NEW YORK

12-JK1-35

SKILLING, HELLE, CHRISTIANSEN, ROBERTSON — Structural & Civil Engineers

PROJECT: THE WORLD TRADE CENTER | TITLE: BEAM SUPPORT OVER TOP OF PERIMETER WALL | DATE: 4-18-69

REVISIONS

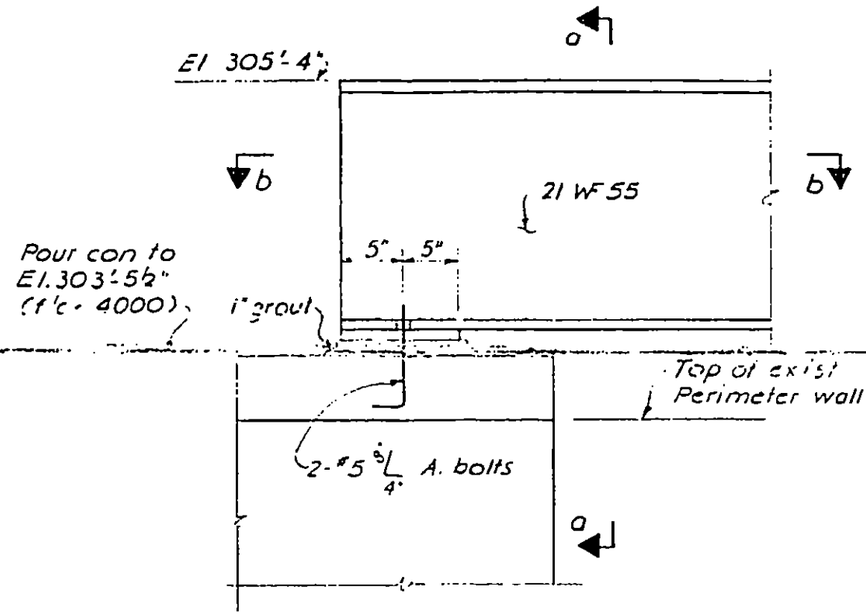

ELEVATION

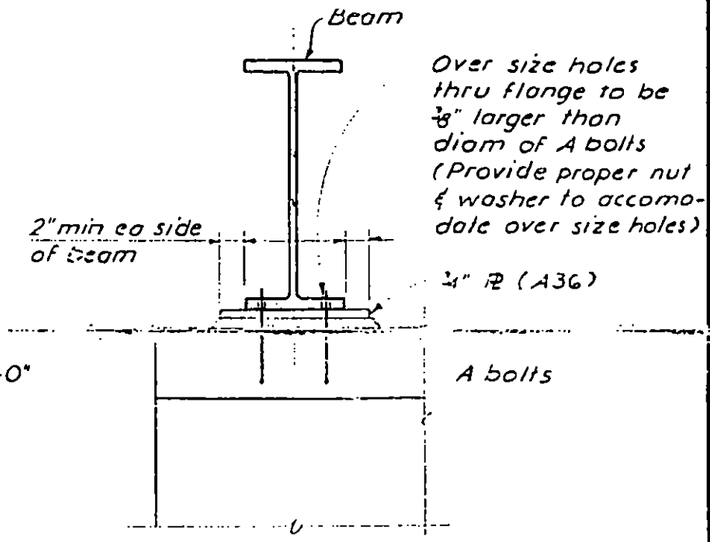

Section a-a

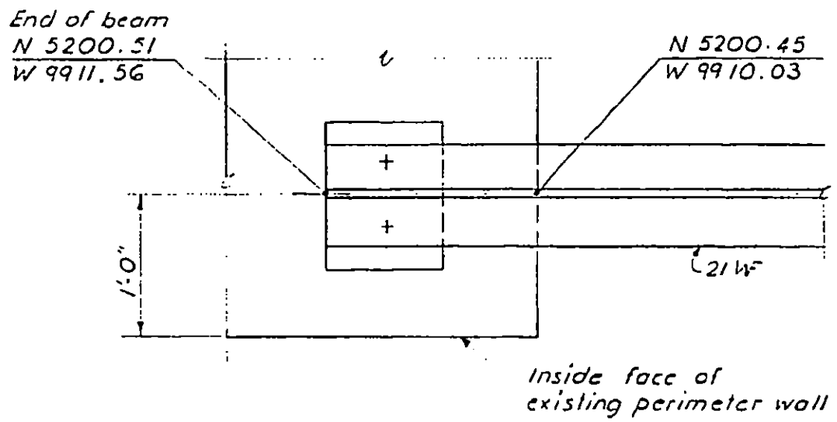

Section b-b

LICENSED PROFESSIONAL ENGINEER
LESLIE E. ROBERTSON
No. 34360
UNIVERSITY OF THE STATE OF NEW YORK

DESIGNED

DRAWN: F. Smith

REVIEWED: E.L.

12-JK1-36

SKILLING - HELLE - CHRISTIANSEN - ROBERTSON Structural & Civil Engineers

PROJECT THE WORLD TRADE CENTER | TITLE DETAIL OF PLATE GIRDER | DATE 5-1-68

REVISIONS
7-19-68
10-15-68

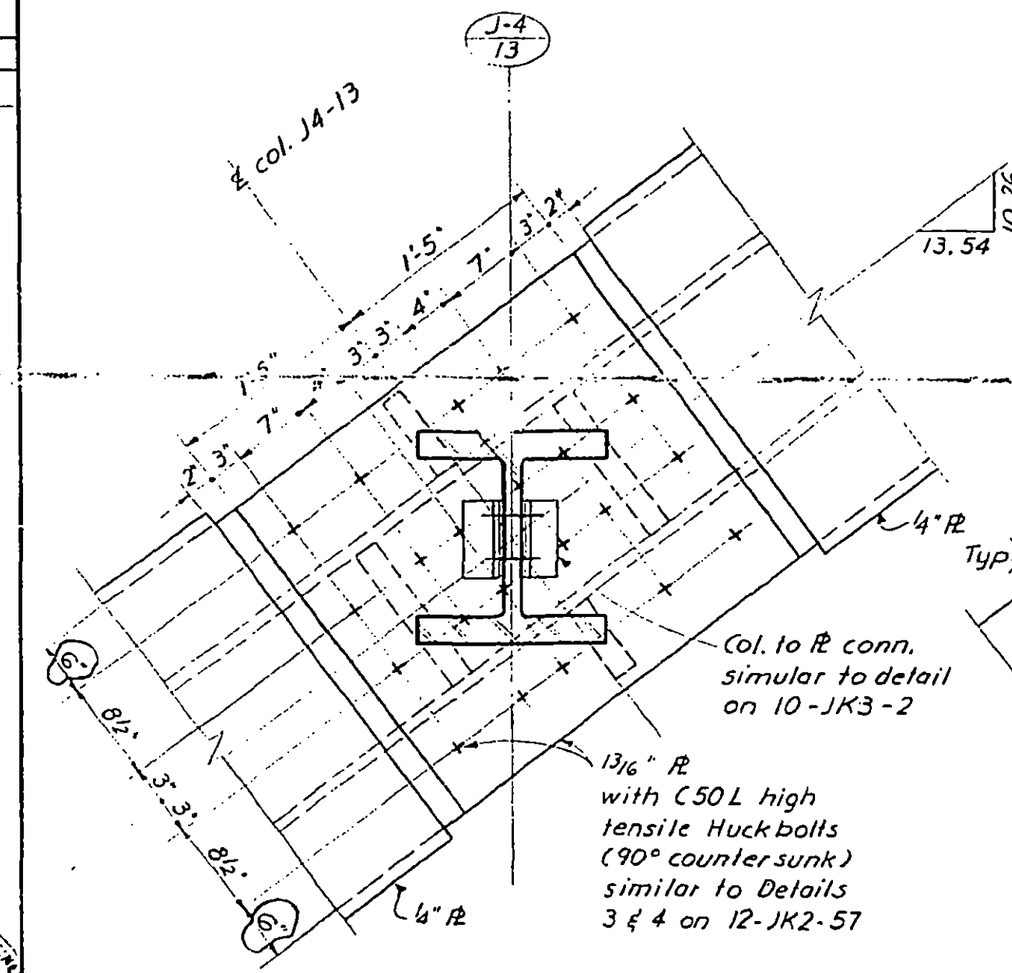

Detail 3

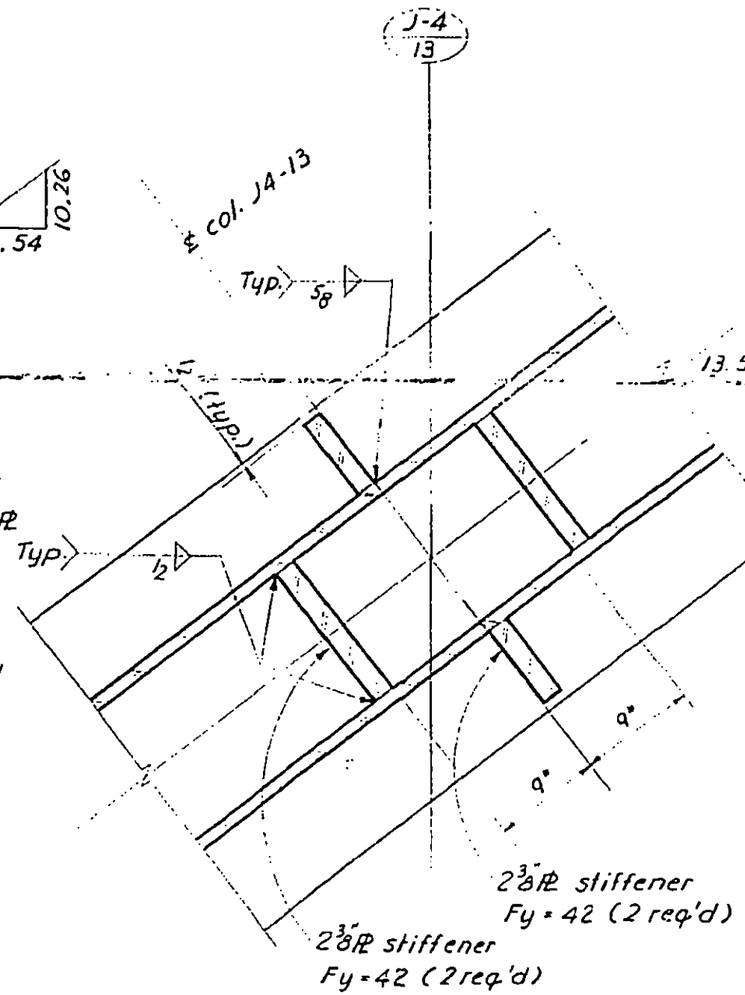

Detail 4

LICENSED PROFESSIONAL ENGINEER LESLIE E. ROBERTSON STATE OF NEW YORK

12-JK2-65

SKILLING - HELLE - CHRISTIANSEN - ROBERTSON Structural & Civil Engineers

PROJECT THE WORLD TRADE CENTER | TITLE DETAIL OF PLATE GIRDER | DATE 5-1-68

REVISIONS

7-19-68

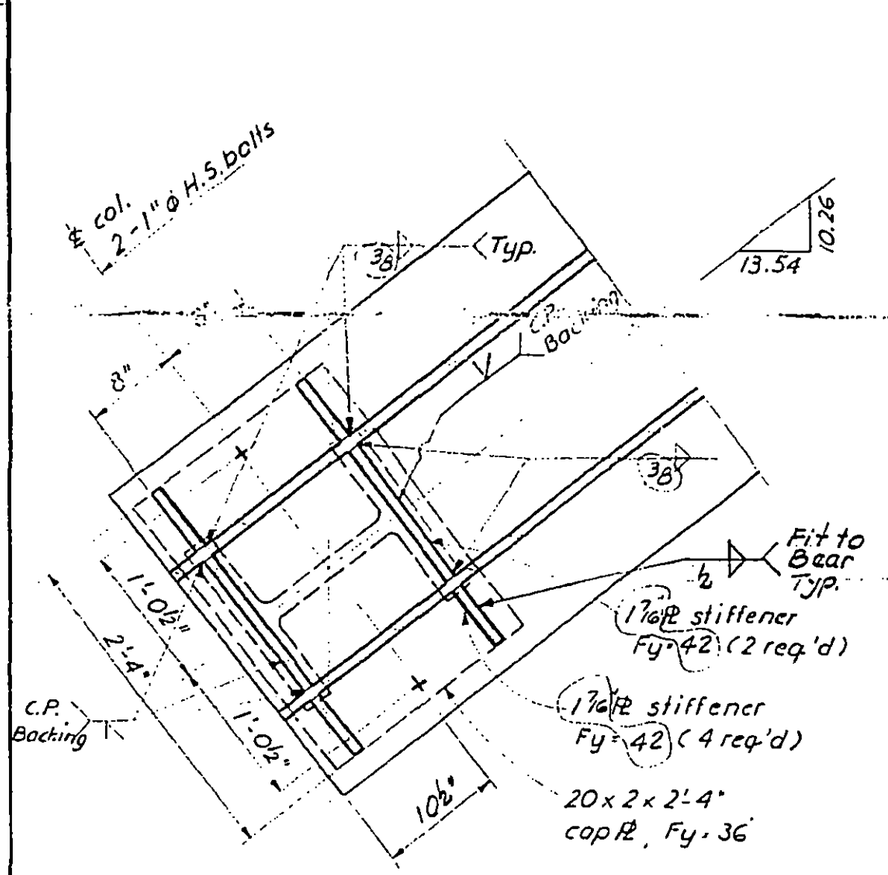

Detail 5

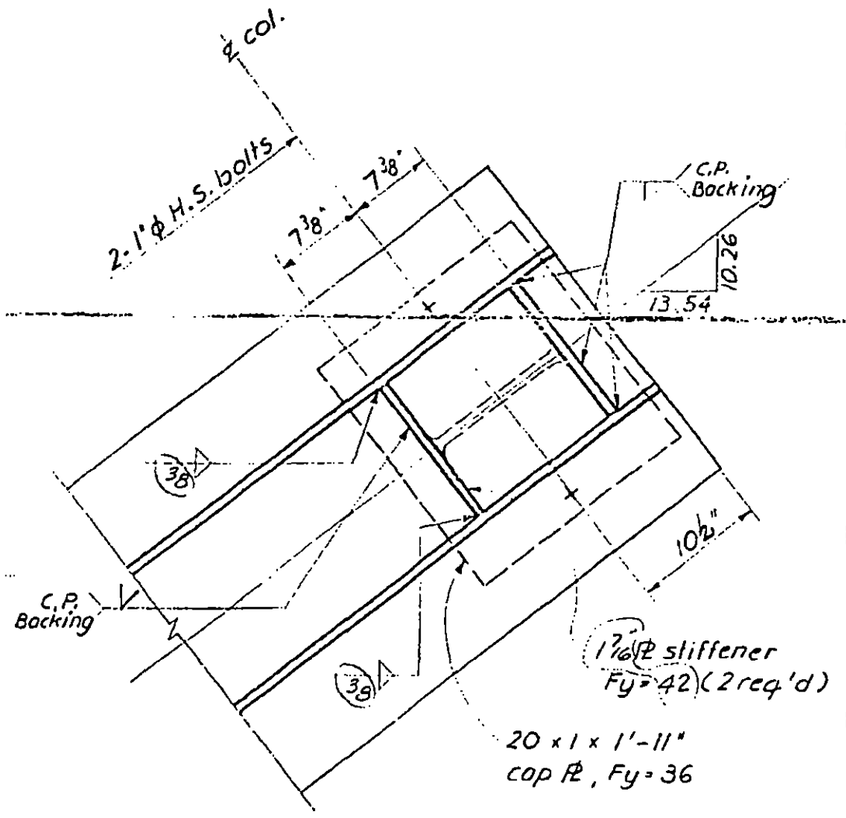

Detail 6

LICENSED PROFESSIONAL ENGINEER
LESLIE E. ROBERTSON
No. 84360
UNIVERSITY OF THE STATE OF NEW YORK

12-JK2-66

SKILLING, HELLE, CHRISTIANSEN, ROBERTSON — Structural & Civil Engineers

PROJECT: THE WORLD TRADE CENTER | TITLE: BEAM SUPPORT OVER TOP OF PERIMETER WALL | DATE: 4-18-69

REVISIONS

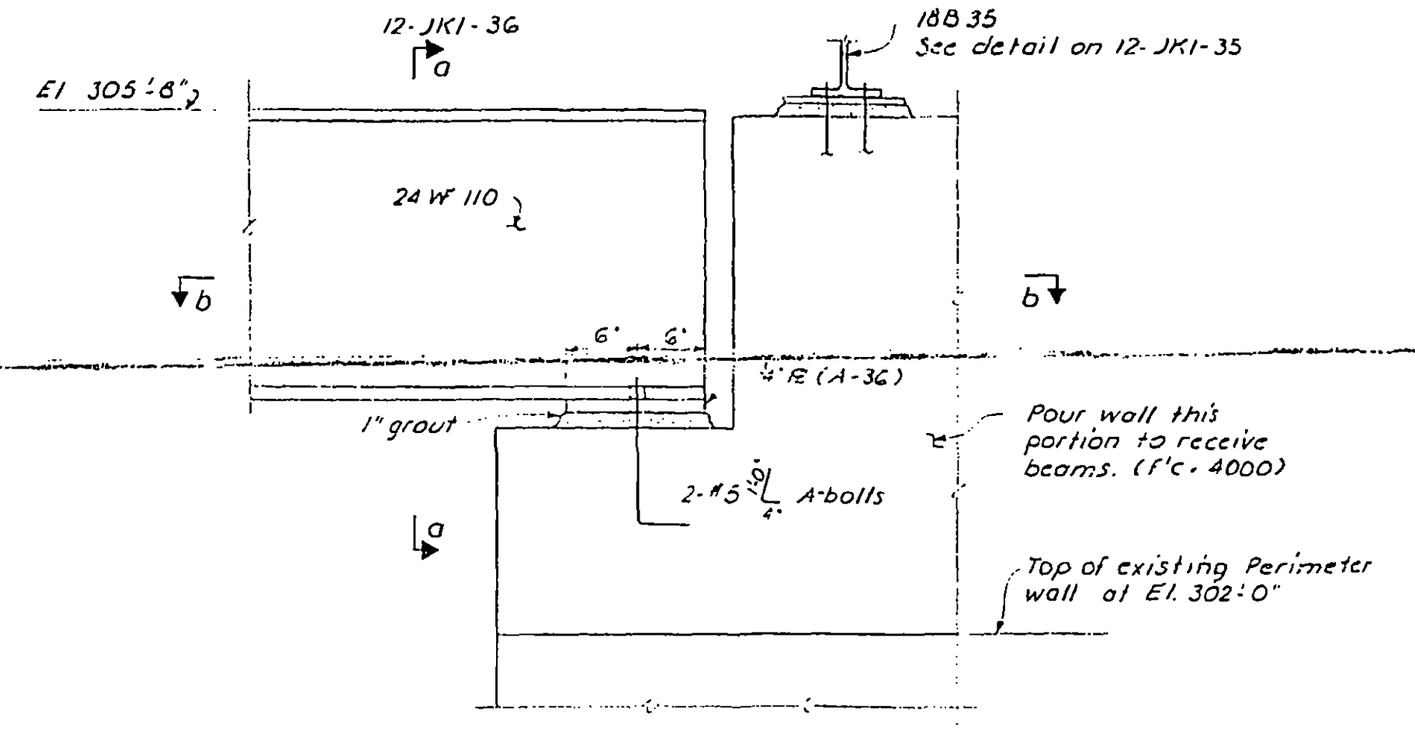

ELEVATION

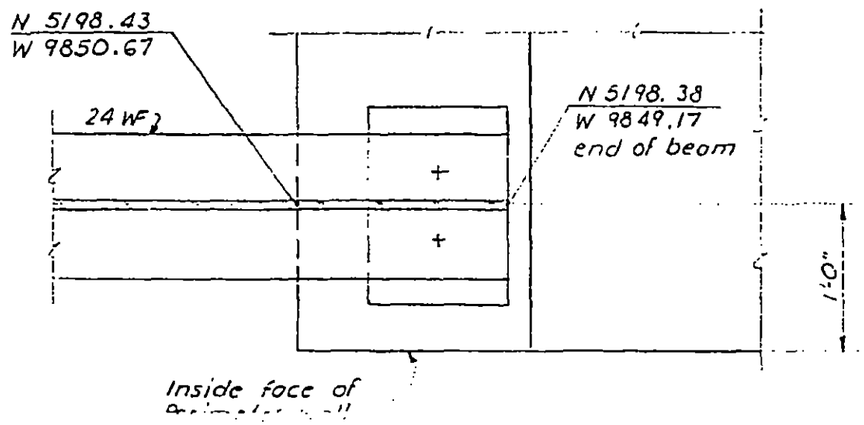

Section b-b

LICENSED PROFESSIONAL ENGINEER
LESLIE E. ROBERTSON
No. 34330
UNIVERSITY OF THE STATE OF NEW YORK

DESIGNED

DRAWN: F. Smith

REVIEWED: E.L.

12-JK1-37

SKILLING - HELLE - CHRISTIANSEN - ROBERTSON Structural & Civil Engineers

PROJECT THE WORLD TRADE CENTER | TITLE DETAIL OF PLATE GIRDER | DATE 5-1-68

REVISIONS
7-19-68
1-3-69

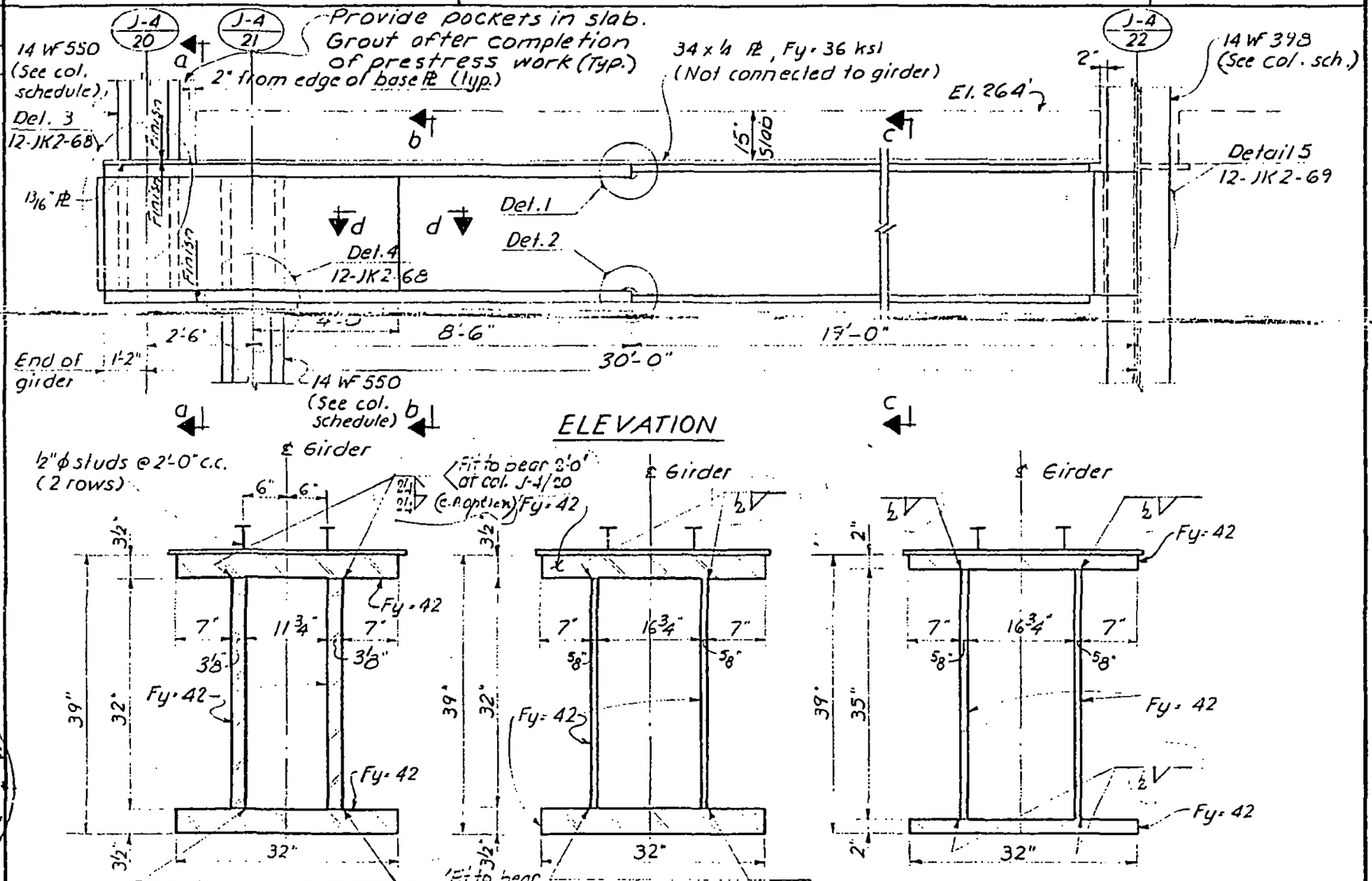

Note:
1. All welds to be E70xx.
2. All bolts to be A 325 friction type. Except as noted.
3. Col. cap PL Detail similar to Detail 104 (10-JK2-7)

DRAWN S.T.M.
REVIEWED E.L.

12-JK2-67

SKILLING - HELLE - CHRISTIANSEN - ROBERTSON Structural & Civil Engineers

PROJECT	TITLE	DATE
THE WORLD TRADE CENTER	DRAWING INDEX	5/15/67

REVISIONS

5-26-67
10-20-67
1- 5-68
1-29-68
2- 9-68
2-29-68
4- 5-68
5- 1-68
6- 7-68
6-11-68
6-28-68
7-15-68
8-15-68
9-13-68
9-20-68
10-15-68
11- 5-68
11-27-68
12- 3-68
12-17-68
1- 3-69
2- 3-69
3- 3-69
3-21-69
4- 1-69
5- 1-69
6-2-69

DRAWING NO. BOOK 12	TITLE
12-JK1-0	Drawing Index
12-JK1-2 thru 4	Typical Beam to Column Connection
12-JK1-30 thru 34	Typical Beam to Girder Connection
12-JK1-35	Typical Detail of Beam Support Over Top of Perimeter Wall
12-JK1-36 & 37	Beam Support over Top of Perimeter Wall
12-JK1-49 thru 52	Beam Connection Details
12-JK1-53 thru 56 & 56A	Beam to Column Connection for Columns Within Refrigeration Room Area
12-JK1-57	Connection Detail at Column K31-9 & K31-10
12-JK1-58	Connection Detail at Column J-15-5
12-JK1-59, 60, 62 thru 66	Beam Connection Details
12-JK1-67 & 68	Beam to Column Connection Where Column Splice 3" Above Floor
12-JK1-69, 69A, 70, 70A thru 70F	Detail of Elevator Separator Beams and Bumper Beams
12-JK1-71 & 72	Beam Detail Under Existing Telephone Manhole
12-JK1-73 thru 77 & 83	Detail of Posts, Hangers & Beam Connection Details
12-JK1-78	Floor Beam Diaphragm Details
12-JK1-79 thru 82, 84, 85, 99 & 99A	Beam Connection Details
12-JK1-101	Beam Connection Detail to North of Tower A, A-101 thru A-108
12-JK1-102	Beam Connection Detail to East of Tower A, A-201 thru A-205
12-JK1-103	Beam Connection Detail to South of Tower A, A-301 thru A-310
12-JK1-104	Beam Connection Detail to West of Tower A, A-401 thru A-408
12-JK1-105	Beam Connection Detail to Tower - Type A & A1
12-JK1-106	Beam Connection Detail to Tower - Type B & C
12-JK1-107 & 108	Schedule for Beam Connection to Tower A
12-JK1-109	Beam Connection to Tower A, A-104
12-JK1-110	Beam Connection to Tower A, A-310
12-JK1-111 thru 122	Beam Connection to Tower A
12-JK1-130 & 139	Beam Connection Detail to Tower B
12-JK1-130A	Beam Connection Detail to West of Tower B - B-101 thru B-116
12-JK1-131	Beam Connection Detail to North of Tower B - B-201 thru B-207
12-JK1-132	Beam Connection Detail to East of Tower B - B-301 thru B-309
12-JK1-133	Beam Connection Detail to South of Tower B - B-401 thru B-409
12-JK1-135	Beam Connection Detail to Tower - Type B
12-JK1-136	Schedule for Beam Connection to Tower B
12-JK1-137	Schedule for Beam Connection to Tower B
12-JK1-138	Bracket Support at Exterior Face of Tower
[illegible]	Bracket Detail

LICENSED PROFESSIONAL ENGINEER LESLIE E. ROBERTSON No. 34[illegible] UNIVERSITY OF THE STATE

SKILLING - HELLE - CHRISTIANSEN - ROBERTSON Structural & Civil Engineers

PROJECT THE WORLD TRADE CENTER | TITLE DETAIL OF PLATE GIRDER | DATE 5-1-68

REVISIONS
6-7-68
7-19-68

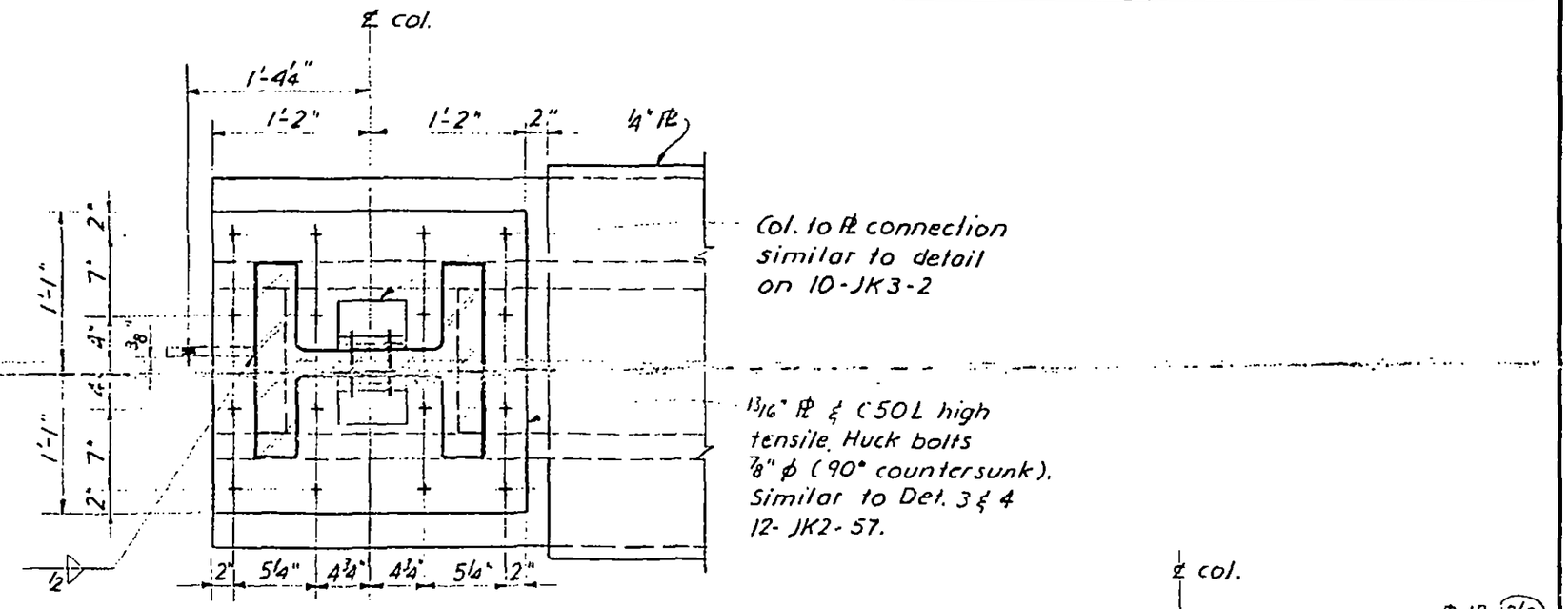

Detail 3
Plan

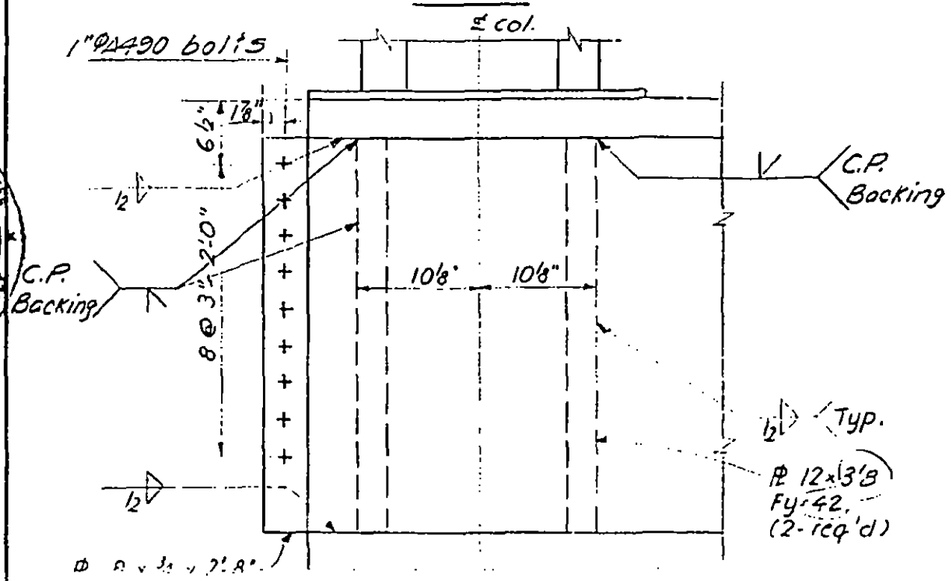

Detail 3
Elevation

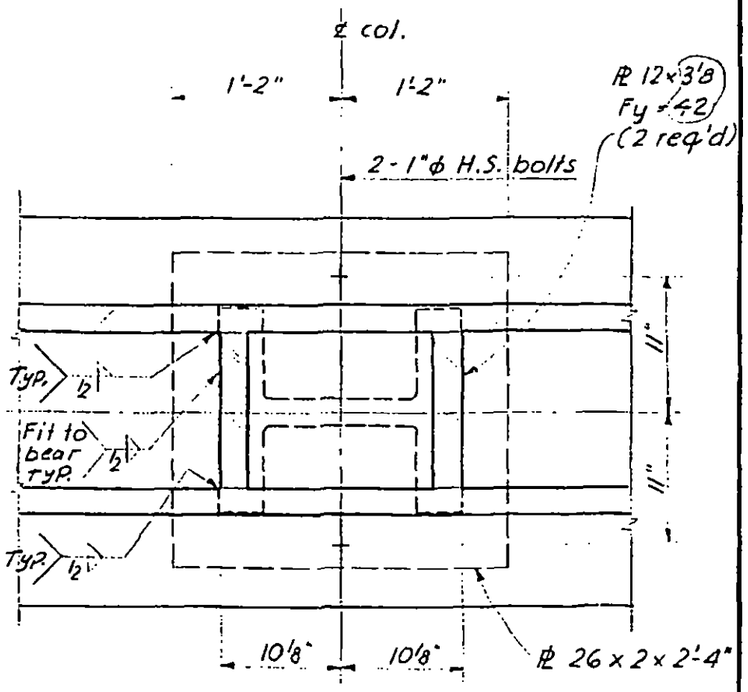

Detail 4

12-JK2-68

LICENSED PROFESSIONAL ENGINEER
LESLIE E. ROBERTSON
No. 34360
UNIVERSITY OF THE STATE OF NEW YORK

SKILLING - HELLE - CHRISTIANSEN - ROBERTSON Structural & Civil Engineers

PROJECT THE WORLD TRADE CENTER | TITLE DETAIL OF PLATE GIRDER | DATE 5-1-68

REVISIONS

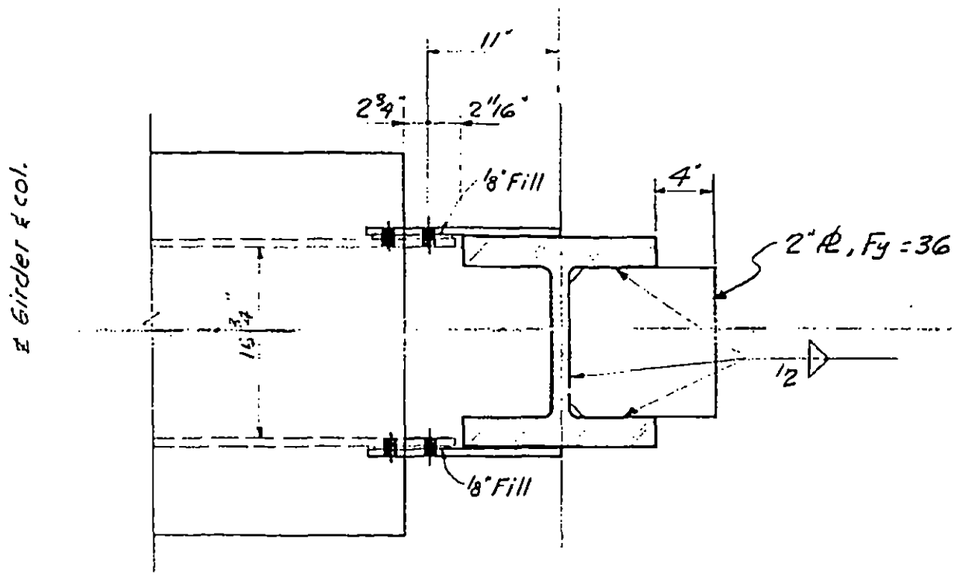

Section a-a

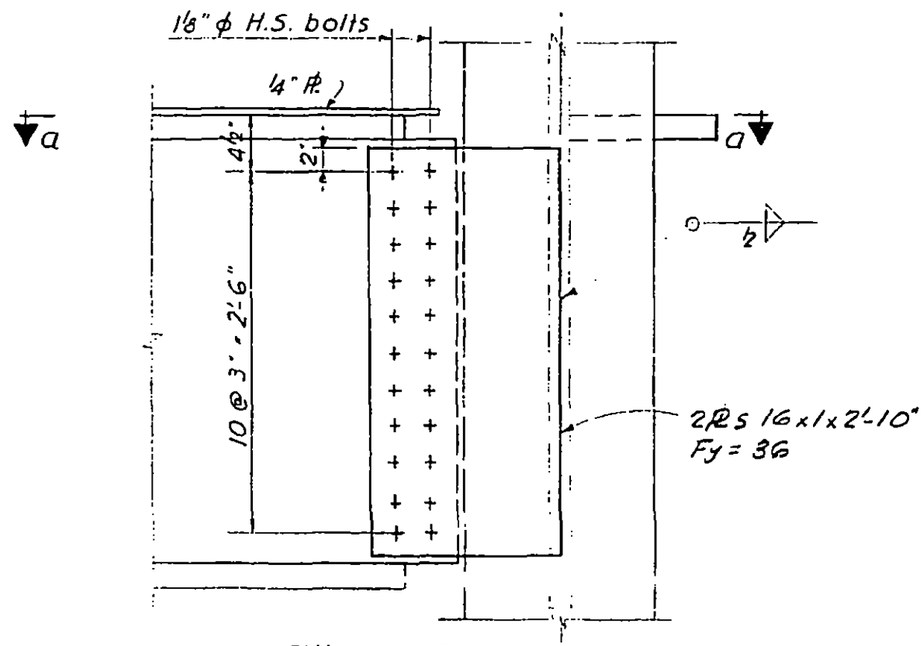

Detail 5

LICENSED PROFESSIONAL ENGINEER
LESLIE E. ROBERTSON
No. 34360
UNIVERSITY OF THE STATE OF NEW YORK

12-JK2-69

SKILLING - HELLE - CHRISTIANSEN - ROBERTSON Structural & Civil Engineers

PROJECT THE WORLD TRADE CENTER | TITLE GIRDER DETAILS | DATE 5-1-68

REVISIONS
6-7-68
7-19-68

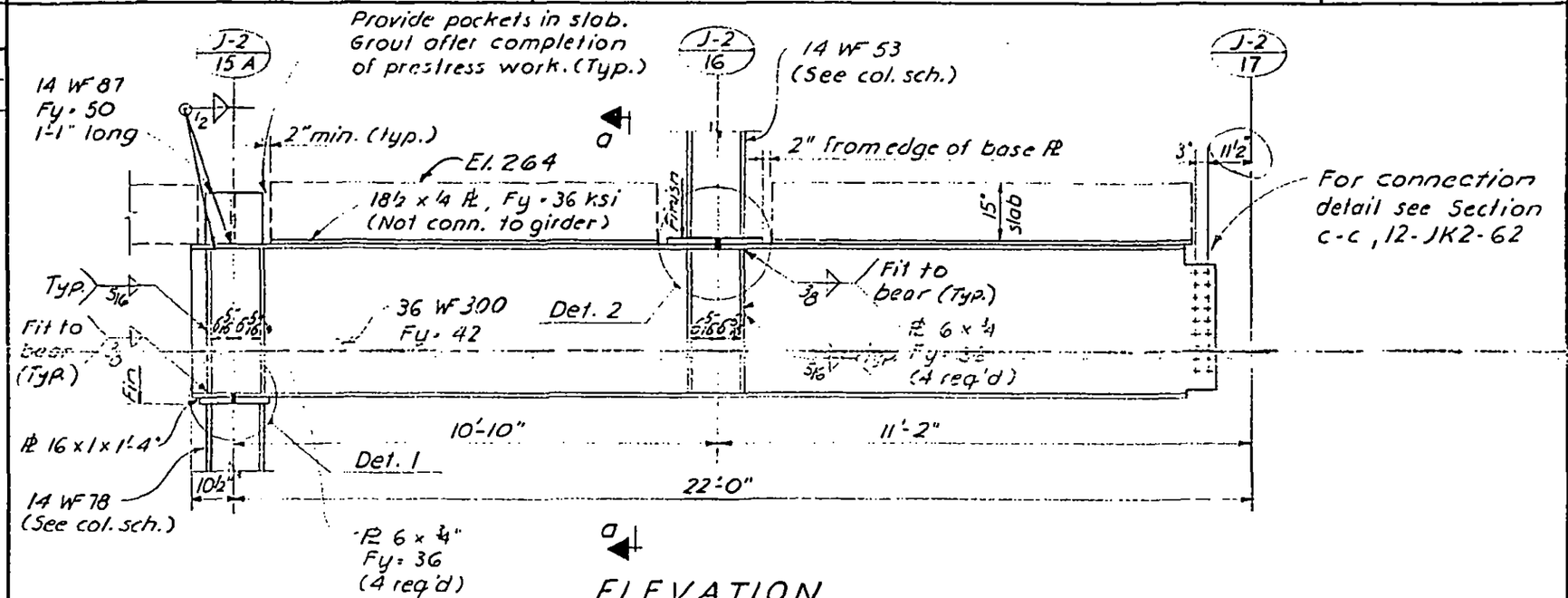

ELEVATION

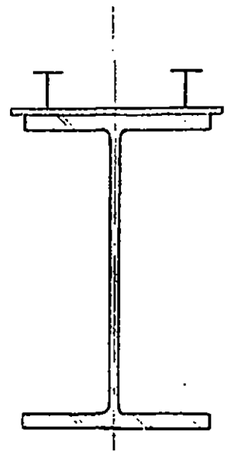

Section a-a

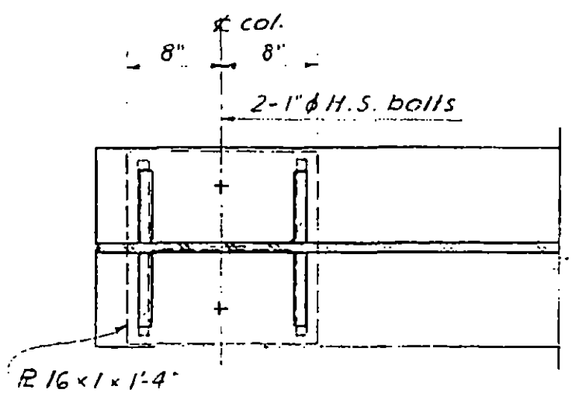

Detail 1

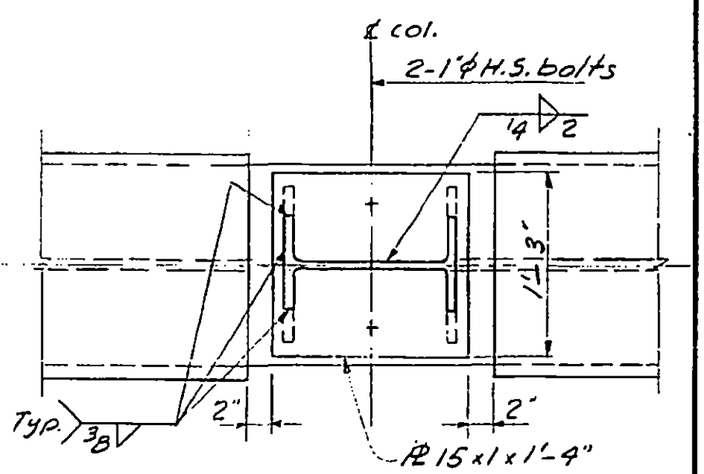

Detail 2

Notes:
1. All welds to be E 10 xx
2. All bolts to be A325 friction type.
3. Col. cap PL Detail similar to Detail 104 (10-JK2-7)

12-JK2-70

LICENSED PROFESSIONAL ENGINEER
LESLIE E. ROBERTSON
No. 34360
UNIVERSITY OF THE STATE OF NEW YORK

SKILLING - HELLE - CHRISTIANSEN - ROBERTSON Structural & Civil Enginoors

PROJECT THE WORLD TRADE CENTER | TITLE TYPICAL BEAM TO COLUMN CONNECTION | DATE 10-20-67

REVISIONS
11-24-67
1-5-68
7-19-68

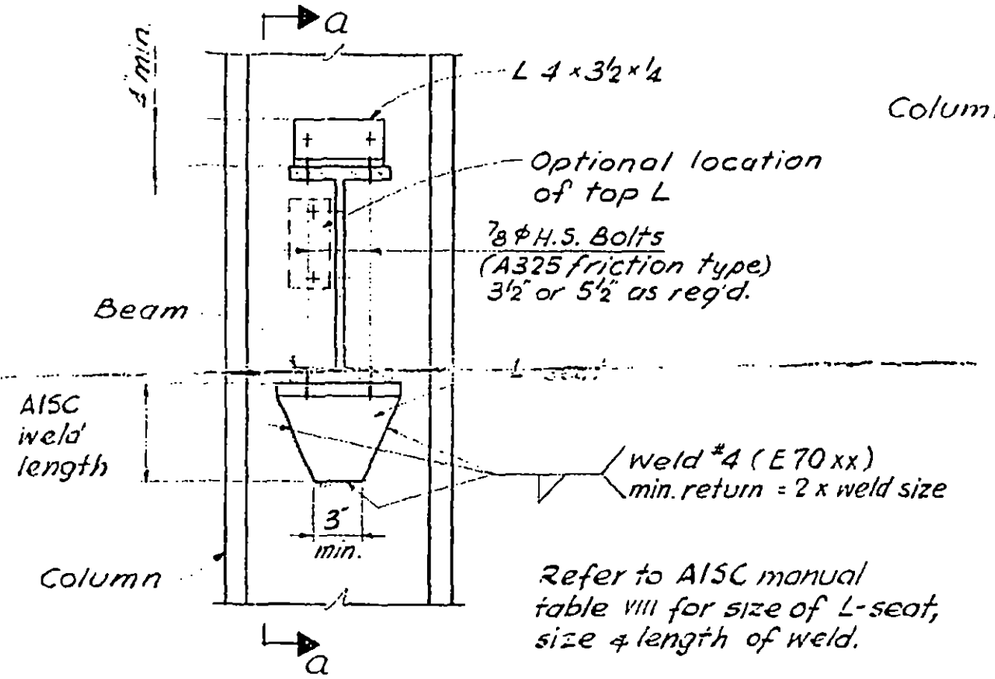

Refer to AISC manual table VIII for size of L-seat, size & length of weld.

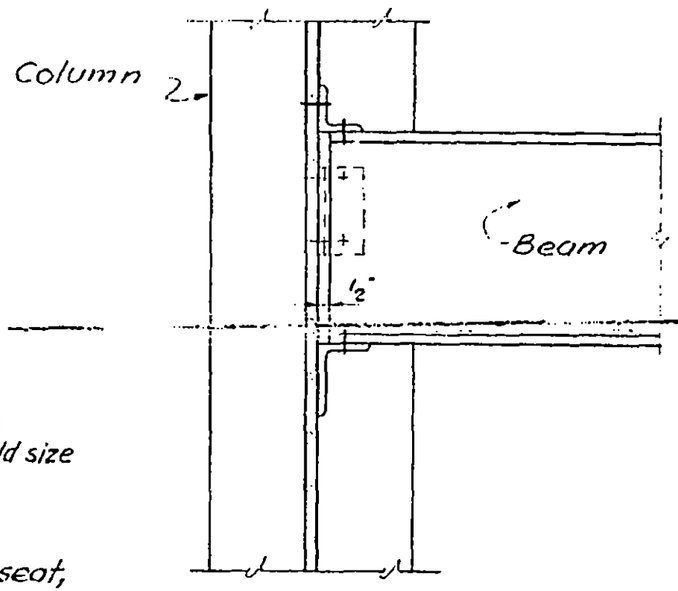

SECTION a-a

ANGLE - SEAT CONNECTION TO COLUMN - WEB

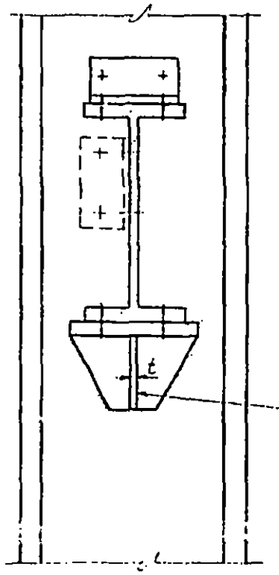

Stiffener
t ≥ beam web thickness (A-36)
≥ 1.4 × beam web thickness (Fy ≥ 42 KSI ≤ 50 KSI)
≥ 1.66 × beam web thickness (Fy = 60 KSI)

OPTION

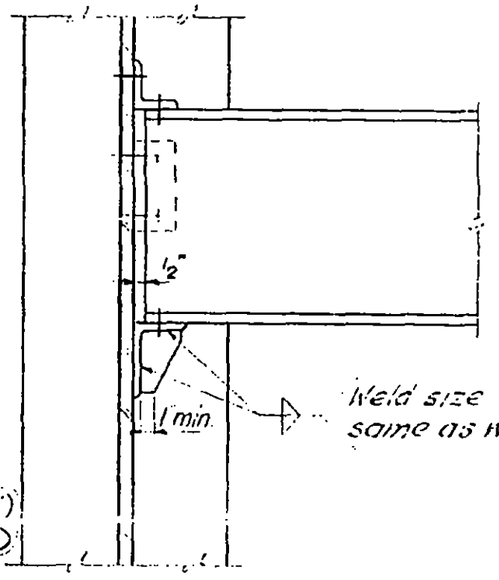

LICENSED PROFESSIONAL ENGINEER
LESLIE E. ROBERTSON
No. 34360
UNIVERSITY OF THE STATE OF NEW YORK

12-JK1-2

SKILLING - HELLE - CHRISTIANSEN - ROBERTSON Structural & Civil Engineers

PROJECT THE WORLD TRADE CENTER | TITLE TYPICAL BEAM TO COLUMN CONNECTION | DATE 10-20-67

REVISIONS
11-24-67
1-5-68
6-28-68
7-19-68

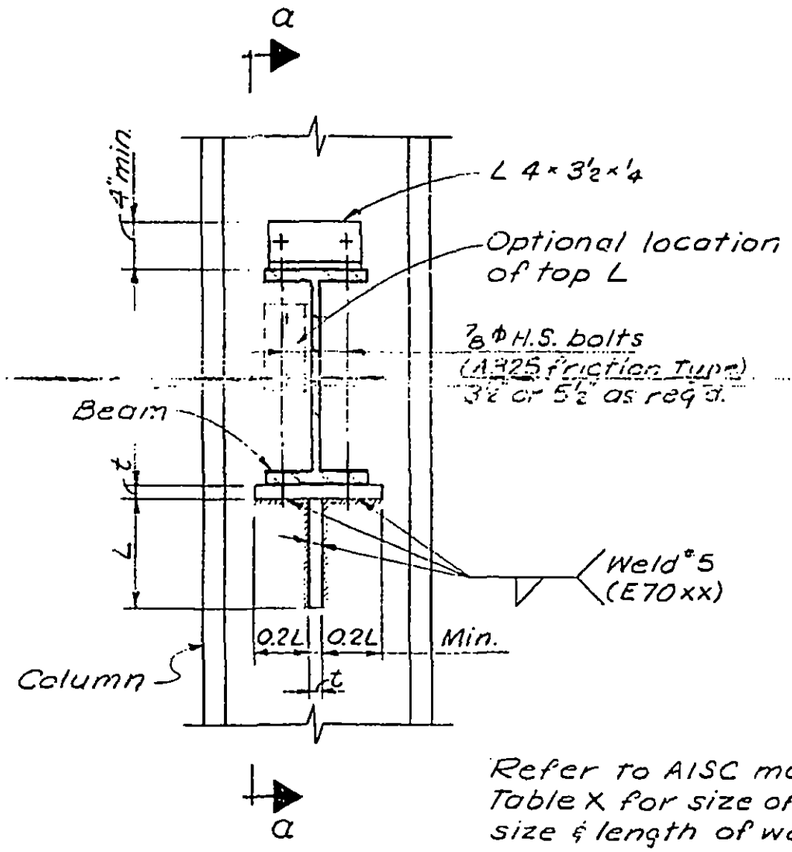

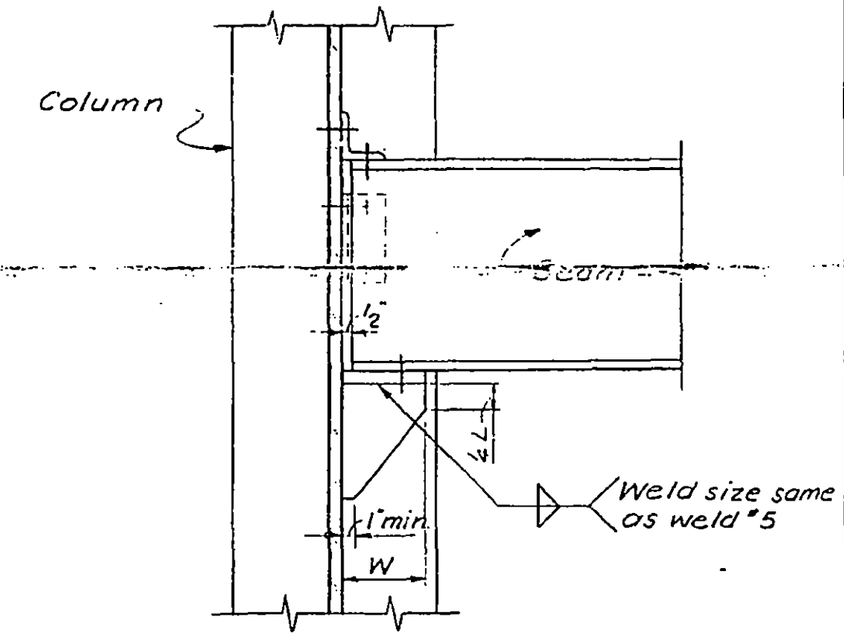

Refer to AISC manual Table X for size of seat, size & length of welds.

SECTION a-a

Min. t ≥ beam web thickness (A-36)
≥ 1.4 × beam web thickness (Fy ≥ 42 KSI) ≤ 50 KSI)
≥ 1.66 × beam web thickness (Fy = 60 KSI)
Struct. tees cut from WF may be used in place of a two-plate seat. But the thickness of flange and web of such WF should be equal or greater than the min. t stated above.

STIFFENED SEATED CONNECTION TO COLUMN-WEB

LICENSED PROFESSIONAL ENGINEER LESLIE E. ROBERTSON No. 34360 REGISTERED STATE OF NEW YORK

12-JK1-3

SKILLING - HELLE - CHRISTIANSEN - ROBERTSON Structural & Civil Engineers

PROJECT THE WORLD TRADE CENTER | TITLE TYPICAL BEAM TO COLUMN CONNECTION | DATE 10-20-67

REVISIONS

7-19-68

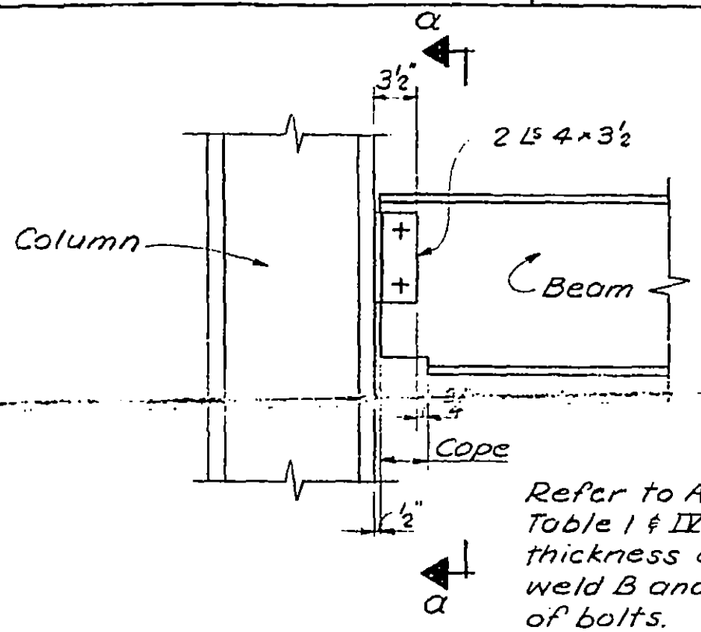

Refer to AISC manual Table I & IV for length & thickness of Ls, size of weld B and number of bolts.

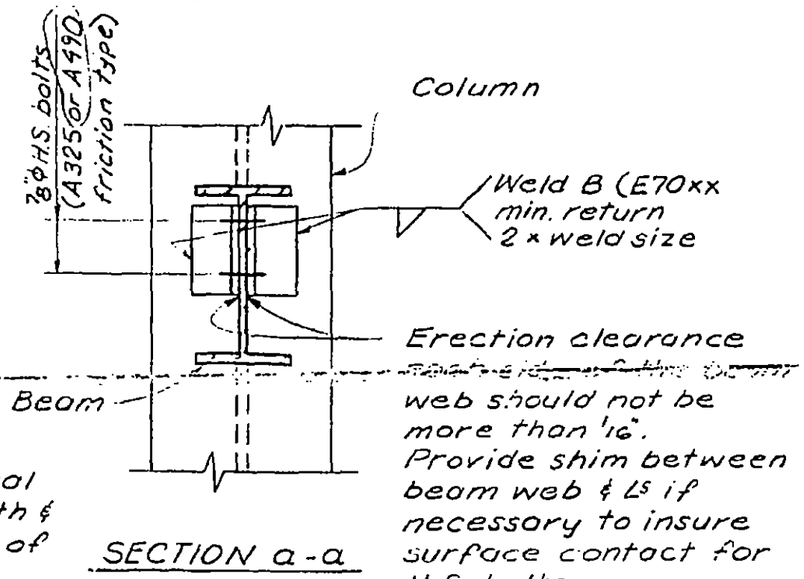

SECTION a-a

web should not be more than 1/16". Provide shim between beam web & Ls if necessary to insure surface contact for H.S. bolts.

CONNECTION TO COLUMN-FLANGE

LICENSED PROFESSIONAL ENGINEER
LESLIE E. ROBERTSON
No. 34360
STATE OF NEW YORK

12-JK1-4

SKILLING - HELLE - CHRISTIANSEN - ROBERTSON Structural & Civil Engineers

PROJECT THE WORLD TRADE CENTER | TITLE GIRDER DETAILS | DATE 5-1-68

REVISIONS

6-7-68

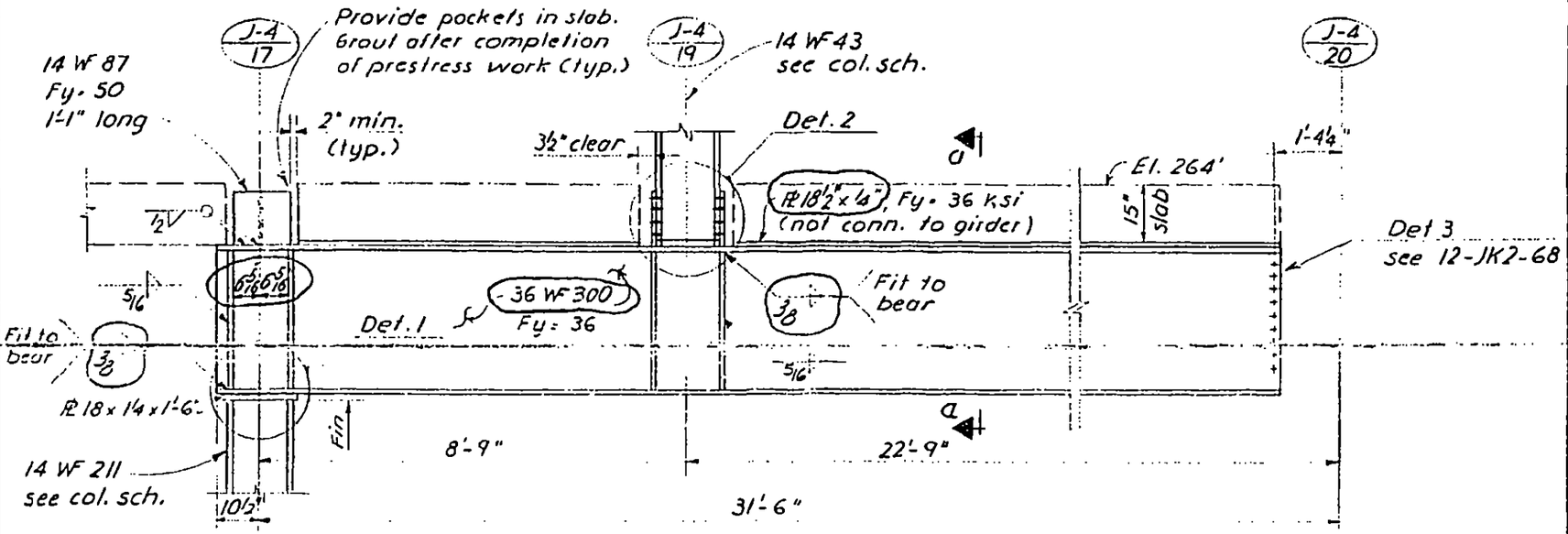

ELEVATION

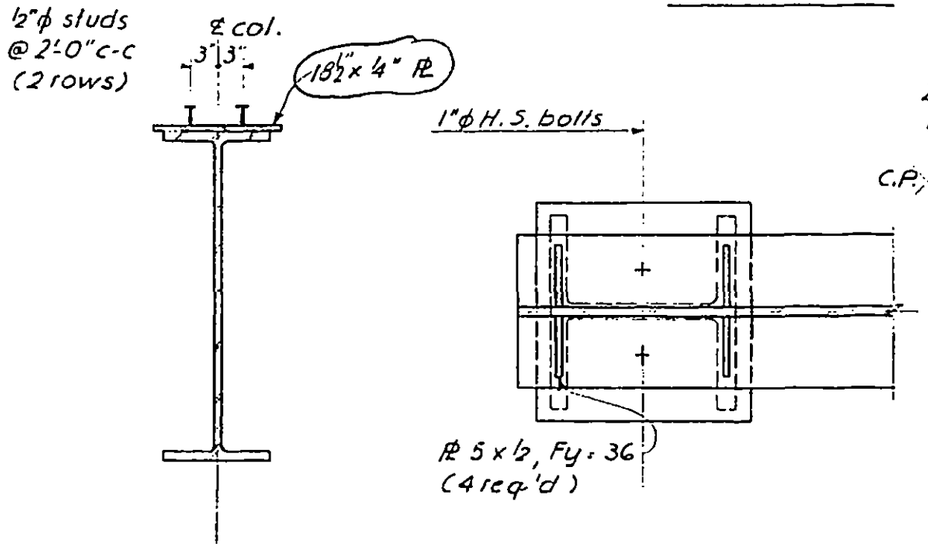

Section a-a

Detail 1

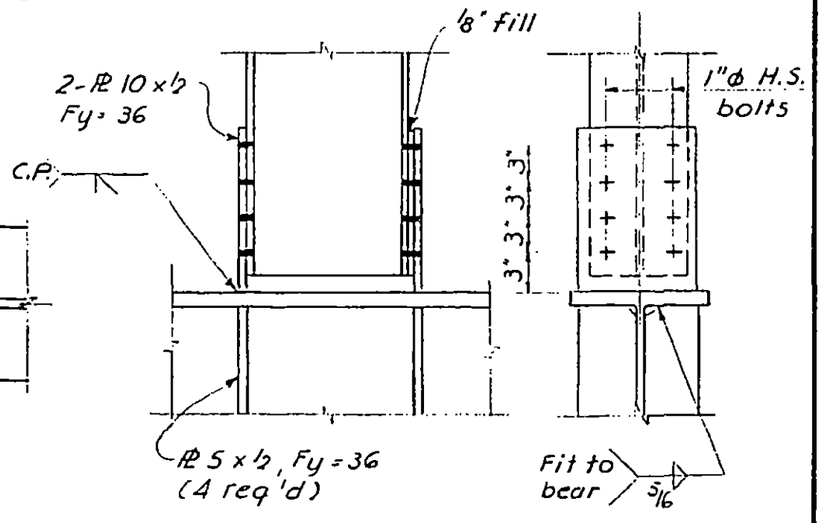

Detail 2

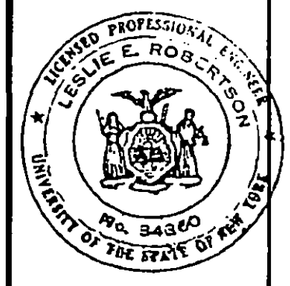

12-JK2-71

SKILLING - HELLE - CHRISTIANSEN - ROBERTSON Structural & Civil Engineers

PROJECT THE WORLD TRADE CENTER | TITLE GIRDER DETAILS | DATE 5-1-68

REVISIONS

6-7-68

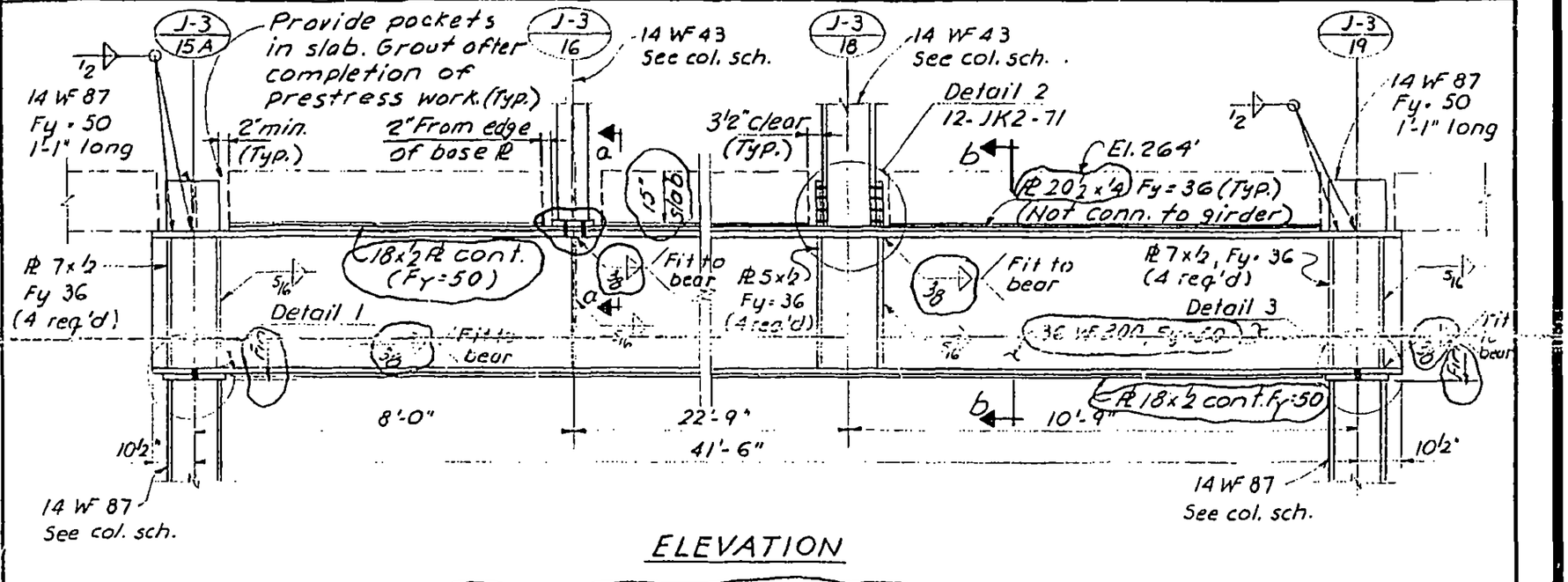

ELEVATION

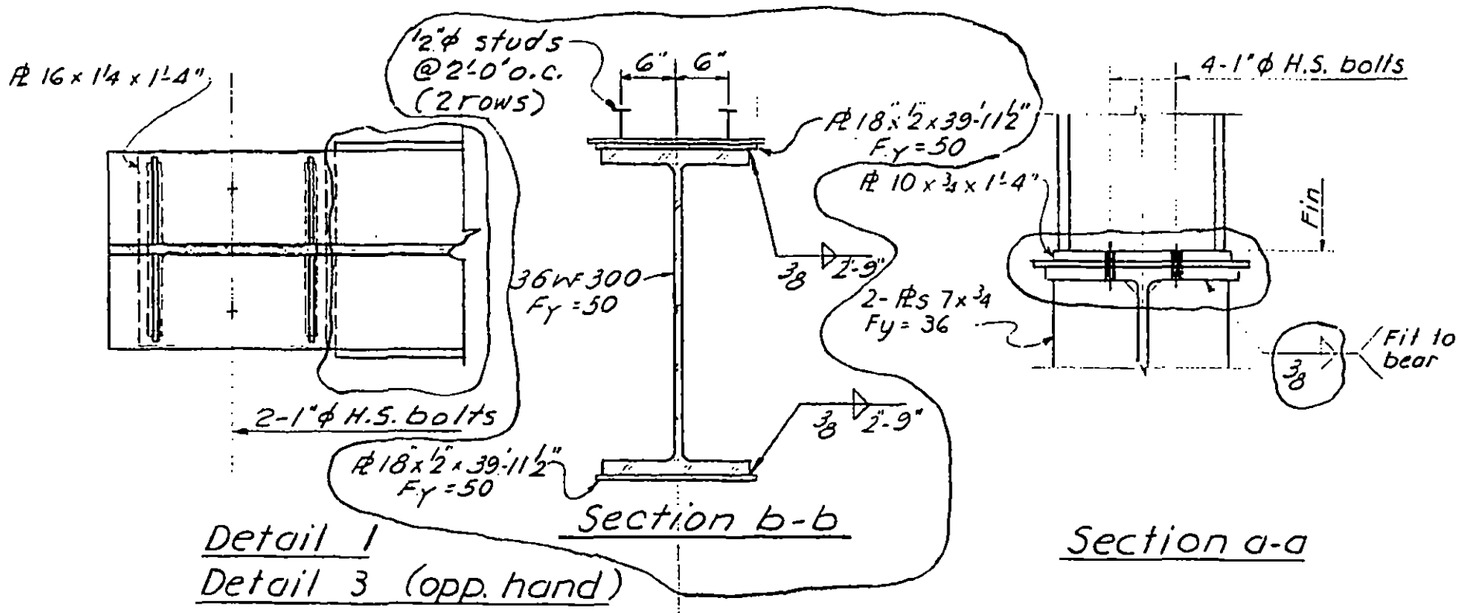

Detail 1

Detail 3 (opp. hand)

Section b-b

Section a-a

LICENSED PROFESSIONAL ENGINEER
LESLIE E. ROBERTSON
No. 34360
UNIVERSITY OF THE STATE OF NEW YORK

12-JK2-72

SKILLING - HELLE - CHRISTIANSEN - ROBERTSON Structural & Civil Engineers

PROJECT THE WORLD TRADE CENTER | TITLE DETAIL OF PLATE GIRDER | DATE 5-1-68

REVISIONS
7-19-68
1-3-69

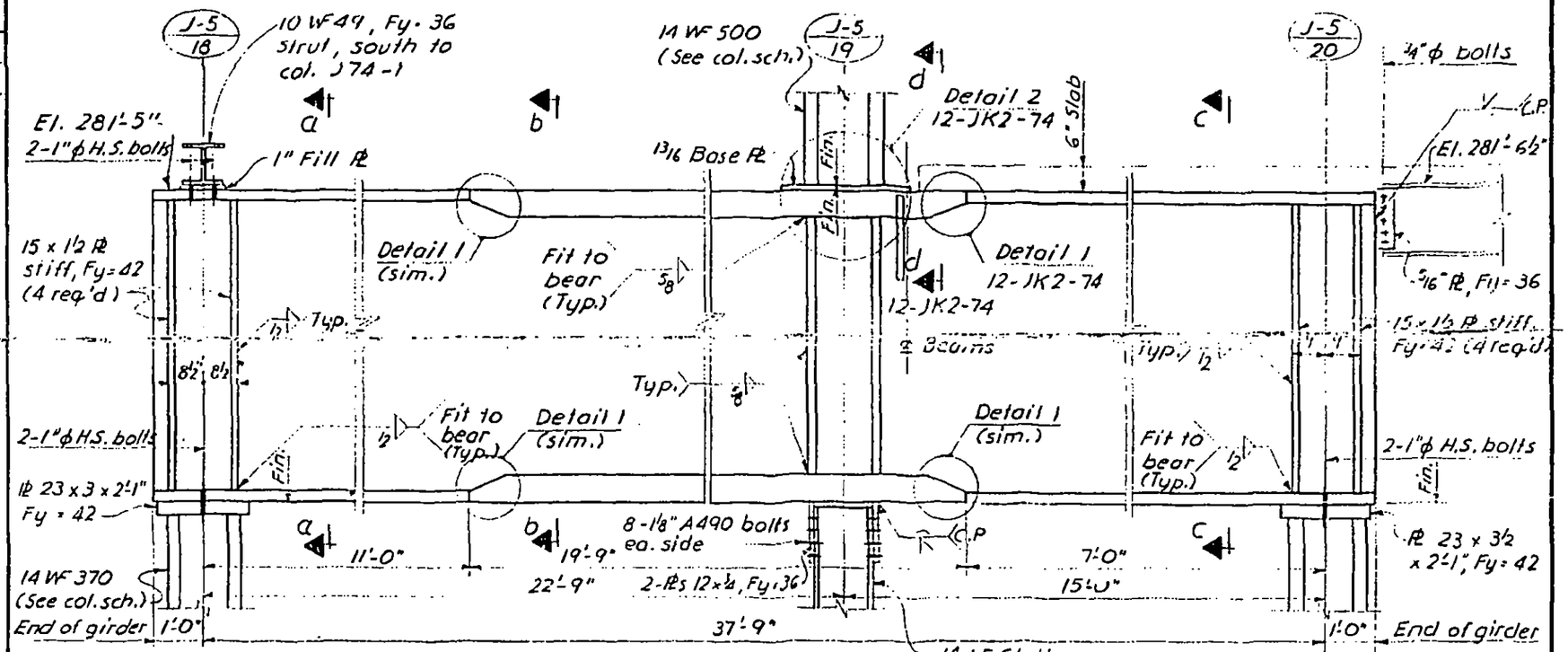

ELEVATION

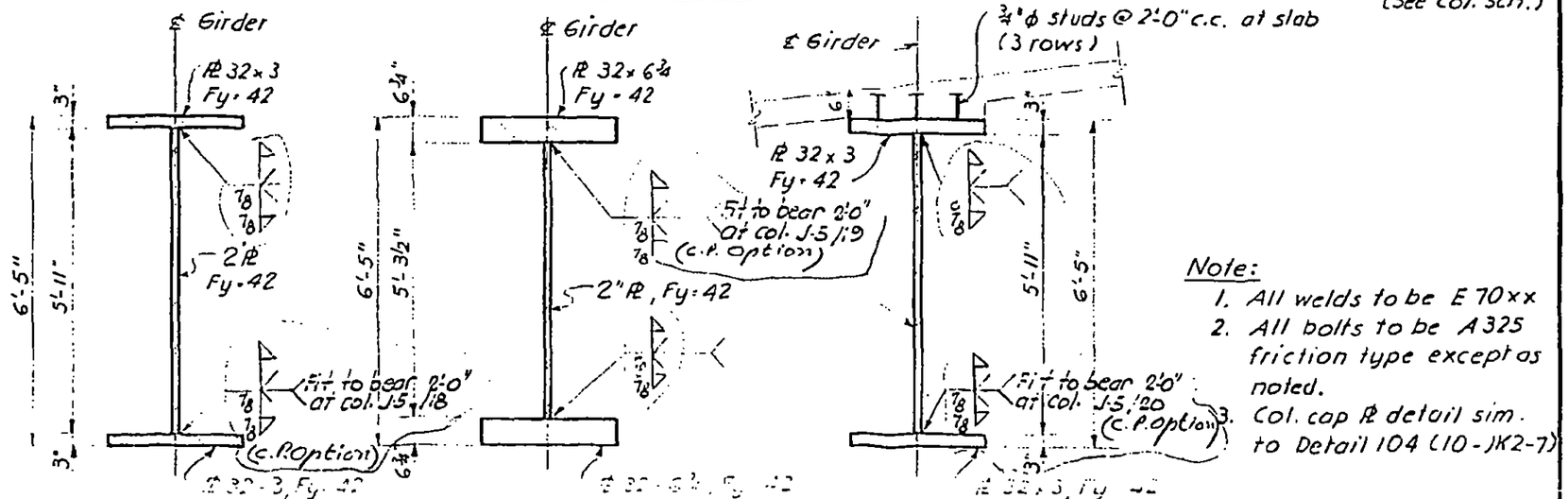

Section a-a Section b-b Section c-c

Note:
1. All welds to be E 70xx
2. All bolts to be A325 friction type except as noted.
3. Col. cap Pl detail sim. to Detail 104 (10-JK2-7)

LICENSED PROFESSIONAL ENGINEER LESLIE E. ROBERTSON No. 34360 UNIVERSITY OF THE STATE OF NEW YORK

DRAWN S.T.M.
REVIEWED E.L.

12-JK2-73

SKILLING - HELLE - CHRISTIANSEN - ROBERTSON Structural & Civil Engineers

PROJECT THE WORLD TRADE CENTER | TITLE DETAIL OF PLATE GIRDER | DATE 5-1-68

REVISIONS

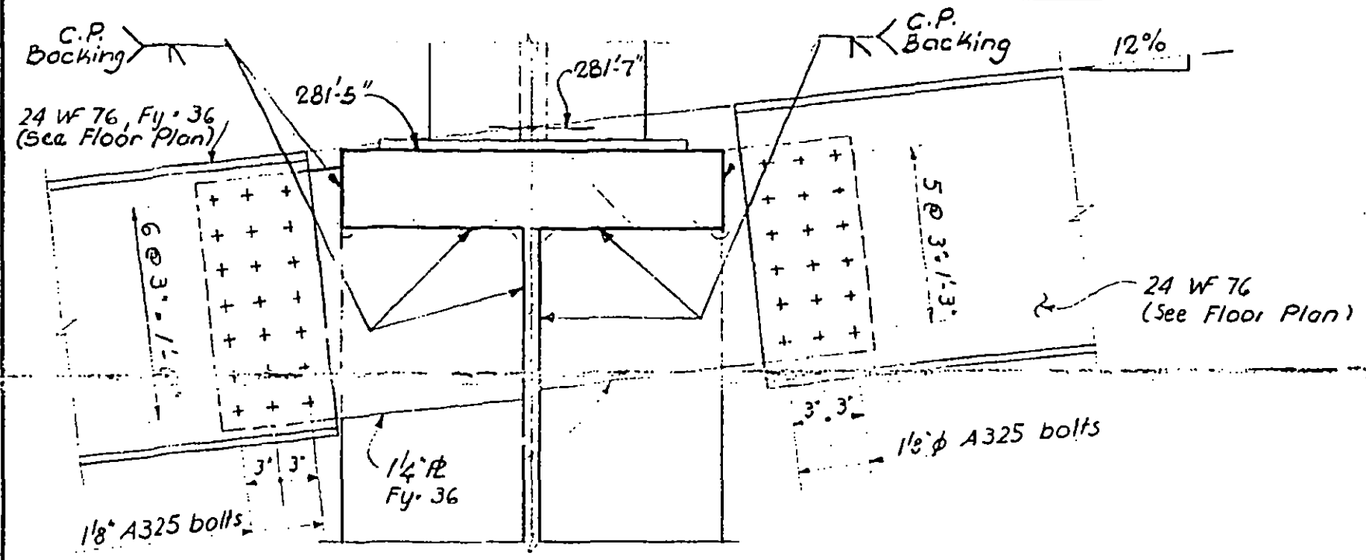

Section d-d

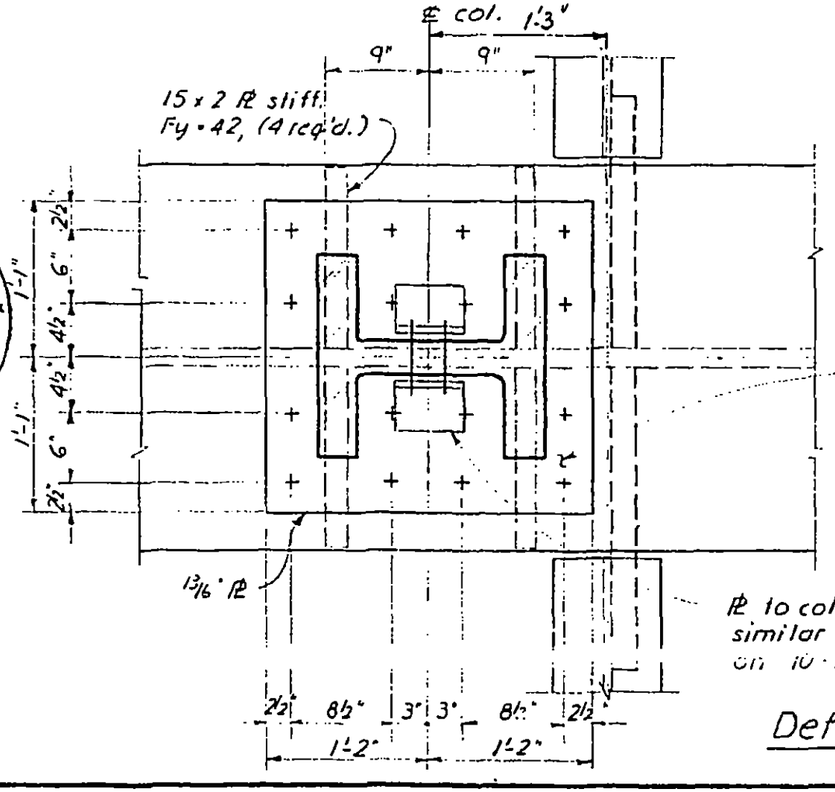

Detail 2

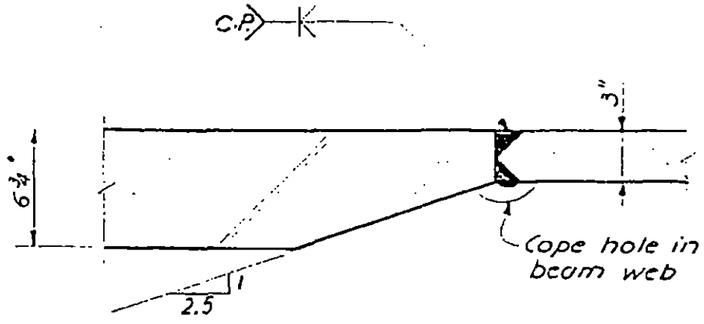

Detail 1

LICENSED PROFESSIONAL ENGINEER
LESLIE E. ROBERTSON
No. 9436
UNIVERSITY OF THE STATE OF NEW YORK

12-JK2-74

SKILLING - HELLE - CHRISTIANSEN - ROBERTSON Structural & Civil Engineers

PROJECT THE WORLD TRADE CENTER | TITLE DETAIL OF PLATE GIRDER | DATE 5-1-68

REVISIONS
6-7-68
7-19-68
1-3-69

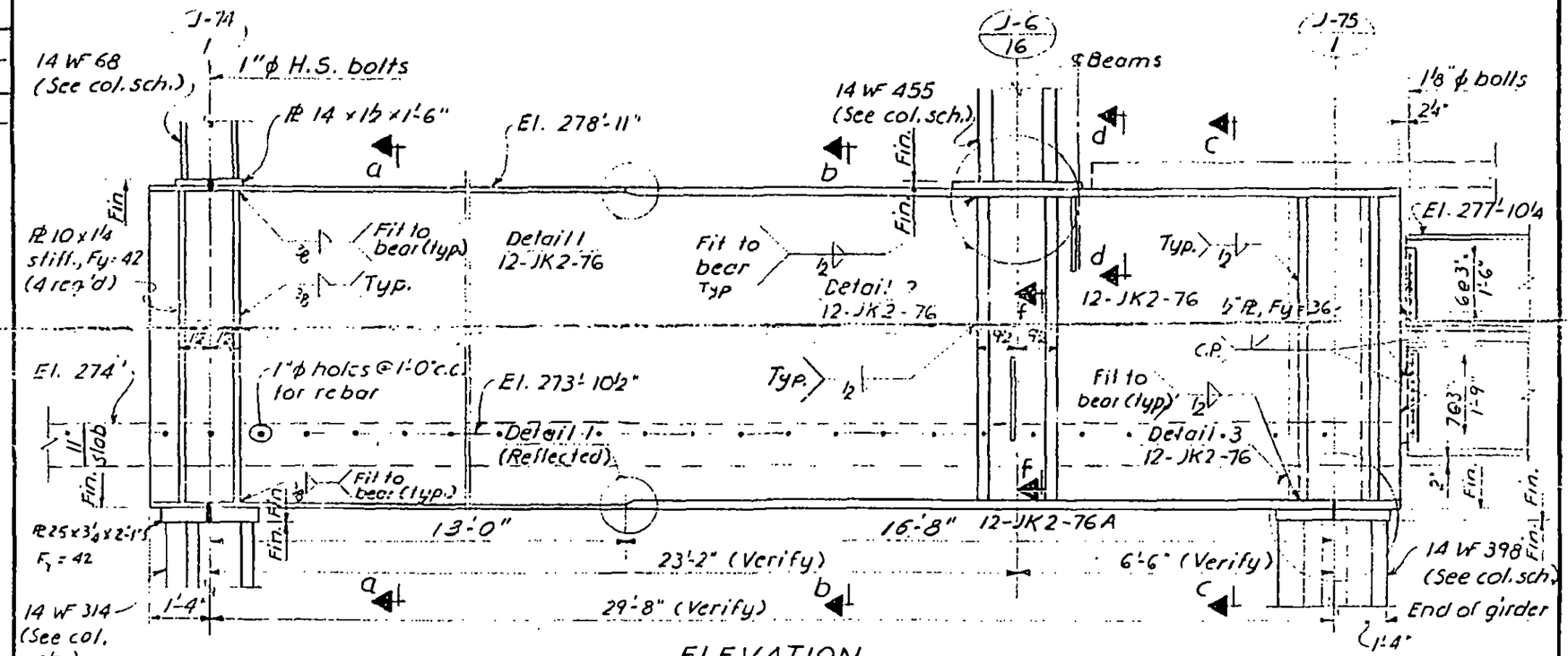

ELEVATION

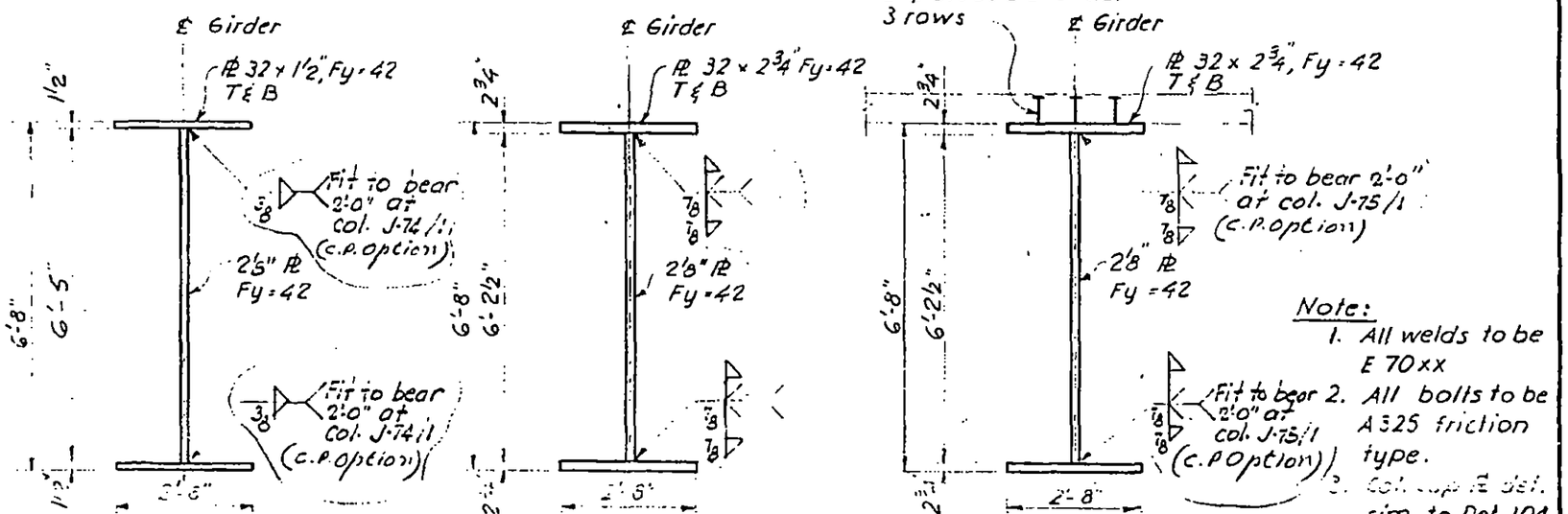

Section a-a Section b-b Section c-c

Note:
1. All welds to be E 70xx
2. All bolts to be A325 friction type.
3. Col. cap PL det. sim. to Det. 10A (10-JK2-7)

12-JK2-75

DRAWN S.T.M.
REVIEWED E.L.

LICENSED PROFESSIONAL ENGINEER LESLIE E. ROBERTSON No. 34360 UNIVERSITY OF THE STATE OF NEW YORK

SKILLING - HELLE - CHRISTIANSEN - ROBERTSON Structural & Civil Engineers

PROJECT THE WORLD TRADE CENTER | TITLE TYPICAL BEAM TO GIRDER CONNECTION | DATE 10-20-67

REVISIONS
2-16-68
7-19-68

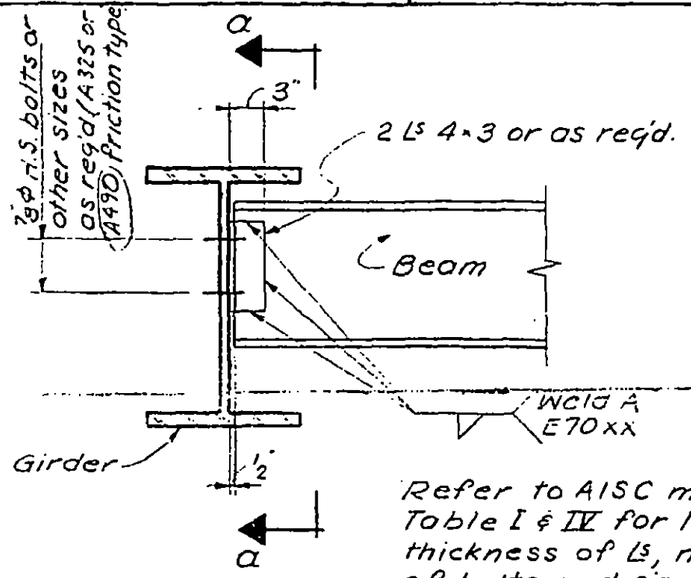

Refer to AISC manual Table I & IV for length & thickness of Ls, number of bolts and size of weld A.

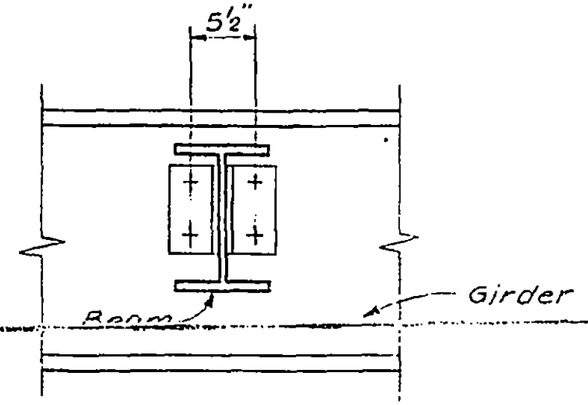

SECTION a-a

WHERE TOP OF BEAM IS LOWER THAN TOP OF GIRDER

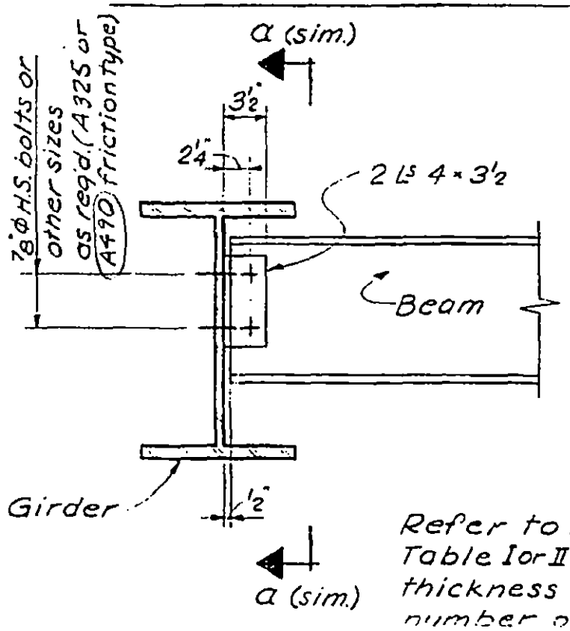

Refer to AISC manual Table I or II for length & thickness of Ls and number of bolts

OPTION

LICENSED PROFESSIONAL ENGINEER
LESLIE E. ROBERTSON
No. 34360
UNIVERSITY OF THE STATE OF NEW YORK

12-JK1-30

SKILLING - HELLE - CHRISTIANSEN - ROBERTSON Structural & Civil Enginoors

PROJECT THE WORLD TRADE CENTER | TITLE TYPICAL BEAM TO GIRDER CONNECTION | DATE 10-20-67

REVISIONS

2-16-68

7-19-68

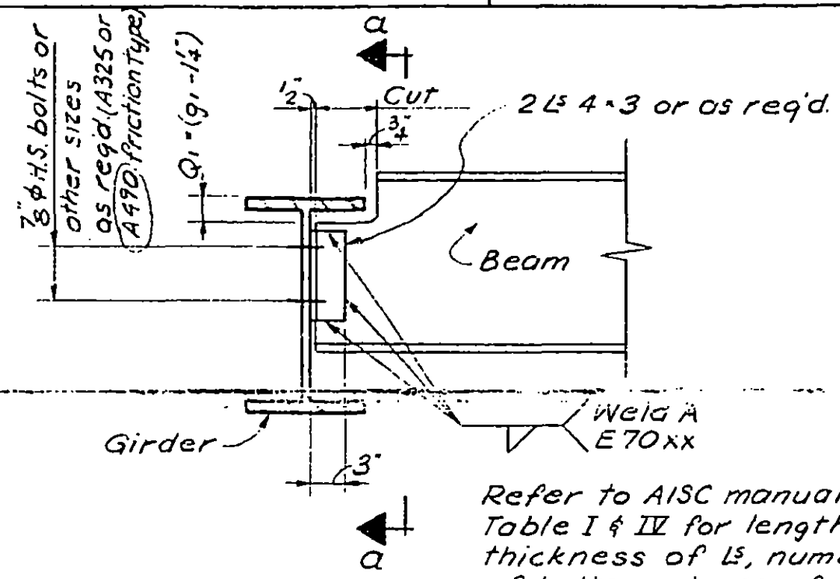

Refer to AISC manual Table I & IV for length & thickness of Ls, number of bolts and size of weld A.

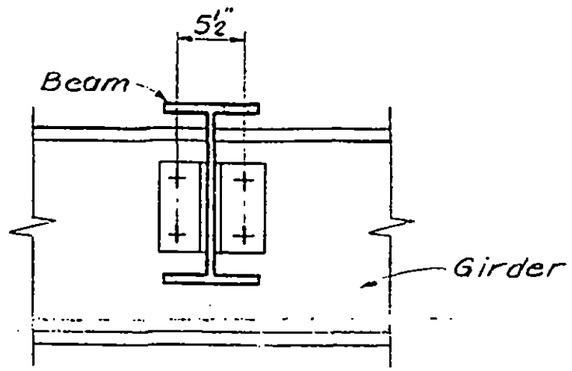

SECTION a-a

WHERE TOP OF BEAM IS SAME OR LESS THAN 6" HIGHER THAN TOP OF GIRDER

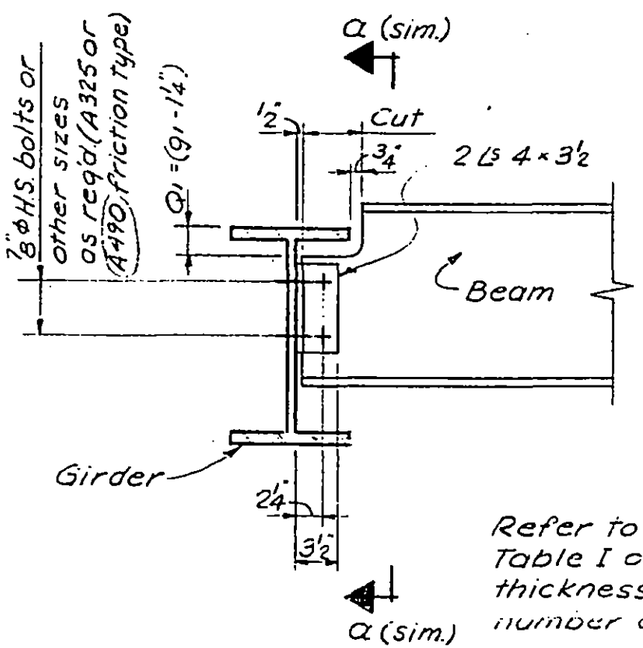

Refer to AISC manual Table I or II for length & thickness of Ls and number of bolts.

OPTION

LICENSED PROFESSIONAL ENGINEER
LESLIE E. ROBERTSON
No. 34360
STATE OF NEW YORK

12-JK1-31

SKILLING - HELLE - CHRISTIANSEN - ROBERTSON Structural & Civil Engineers

PROJECT THE WORLD TRADE CENTER | TITLE DETAIL OF PLATE GIRDER | DATE 5-1-68

REVISIONS
6-7-68
7-19-68

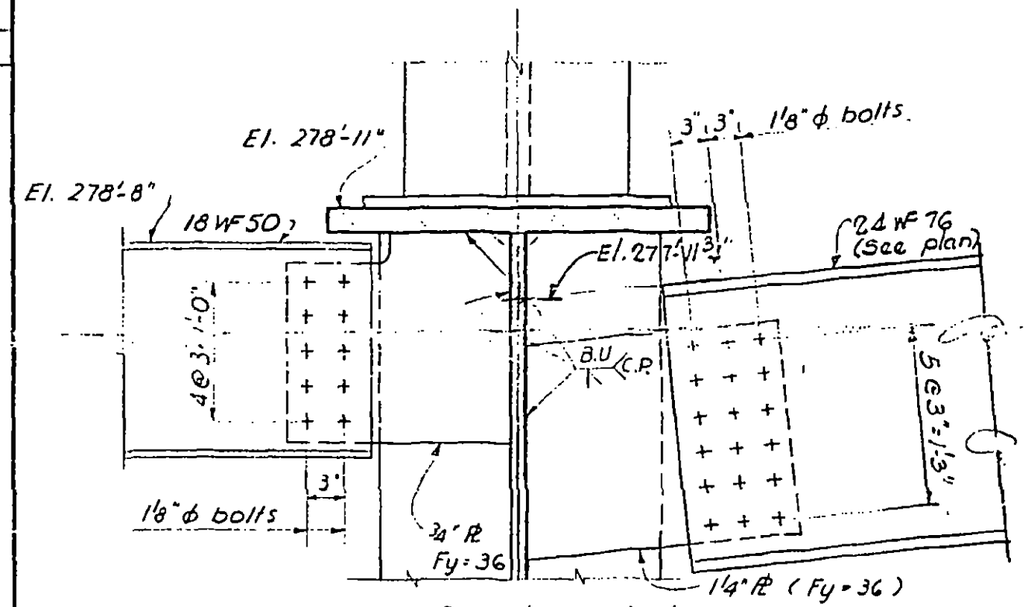

Section d-d

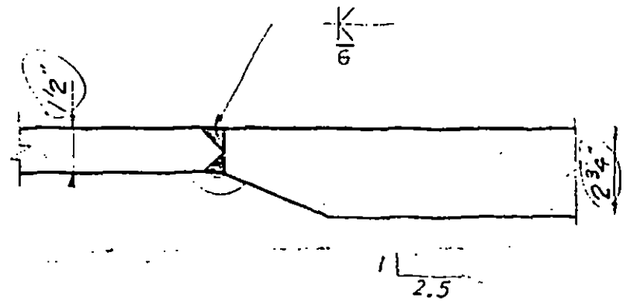

Detail 1

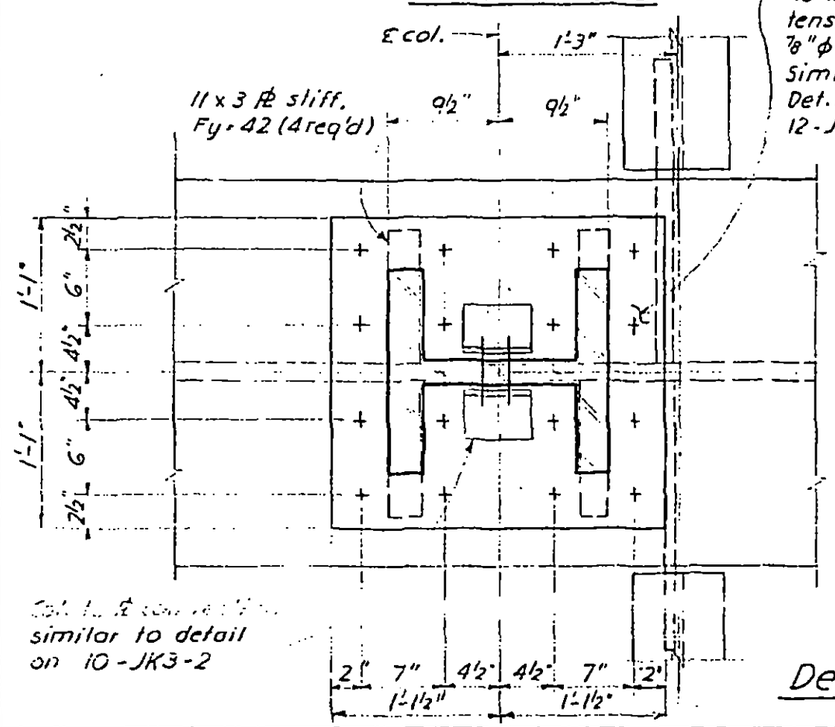

Detail 2

13/16" PL ℄ C 50L high tensile Huckbolts ⅞" ϕ (90° countersunk). Similar to Det. 3 ℄ 4 12-JK2-57.

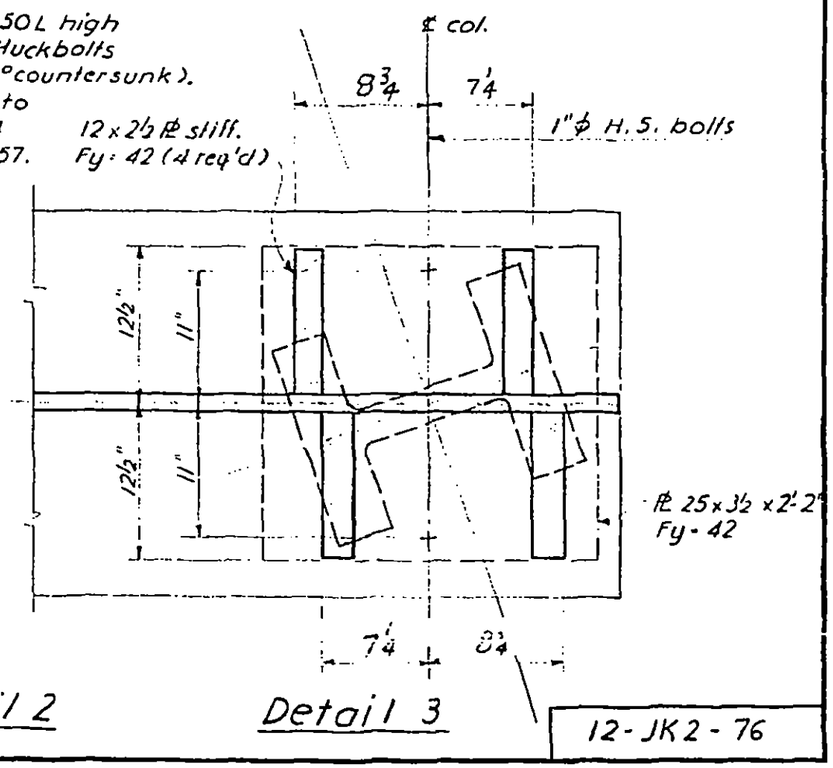

Detail 3

12-JK2-76

LICENSED PROFESSIONAL ENGINEER LESLIE E. ROBERTSON No. 34360 UNIVERSITY OF THE STATE OF N.Y.

SKILLING - HELLE - CHRISTIANSEN - ROBERTSON Structural & Civil Enginoors

PROJECT THE WORLD TRADE CENTER | TITLE DETAIL OF PLATE GIRDER | DATE 5-1-68

REVISIONS

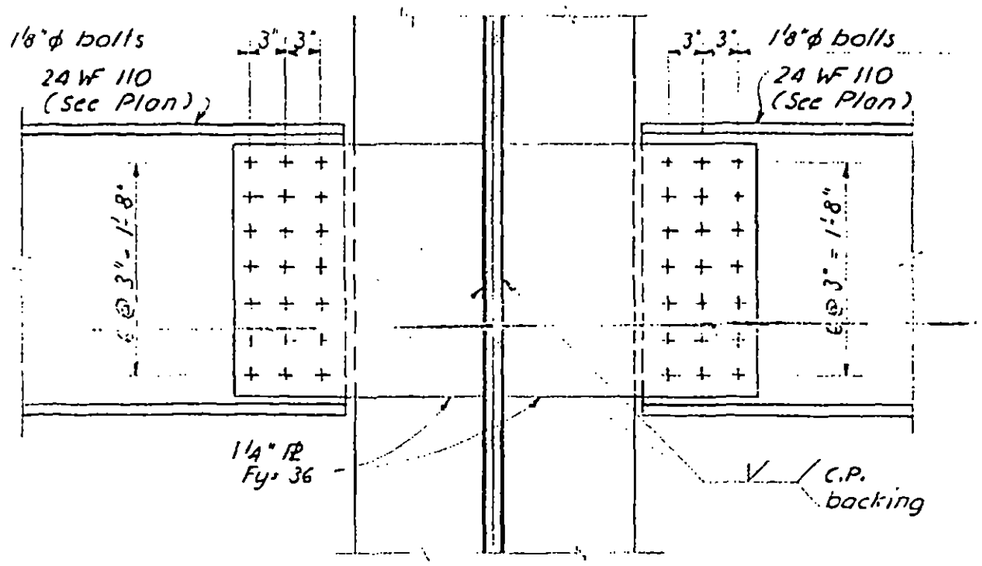

Section f-f

12-JK2-76A

SKILLING - HELLE - CHRISTIANSEN - ROBERTSON Structural & Civil Engineers

PROJECT THE WORLD TRADE CENTER | TITLE DETAIL OF PLATE GIRDER | DATE 5-1-68

REVISIONS
6-7-68
7-19-68
1-6-69

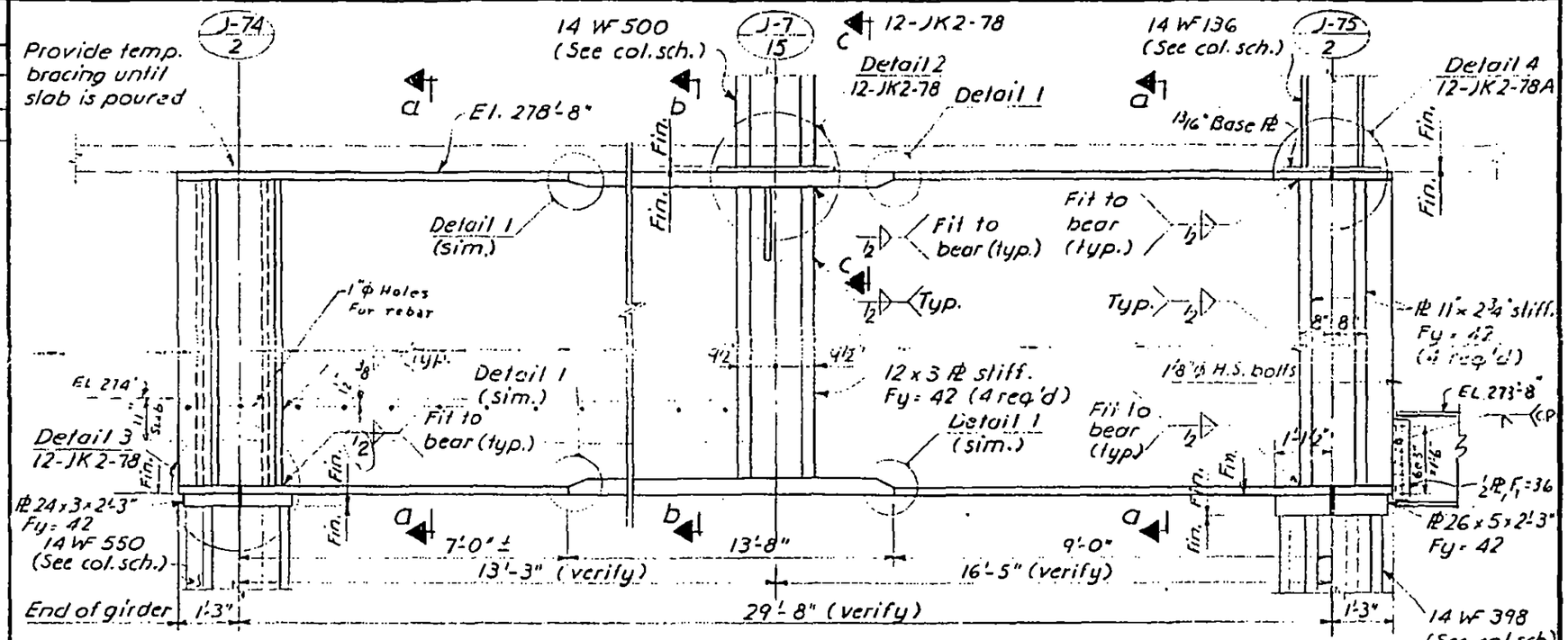

ELEVATION

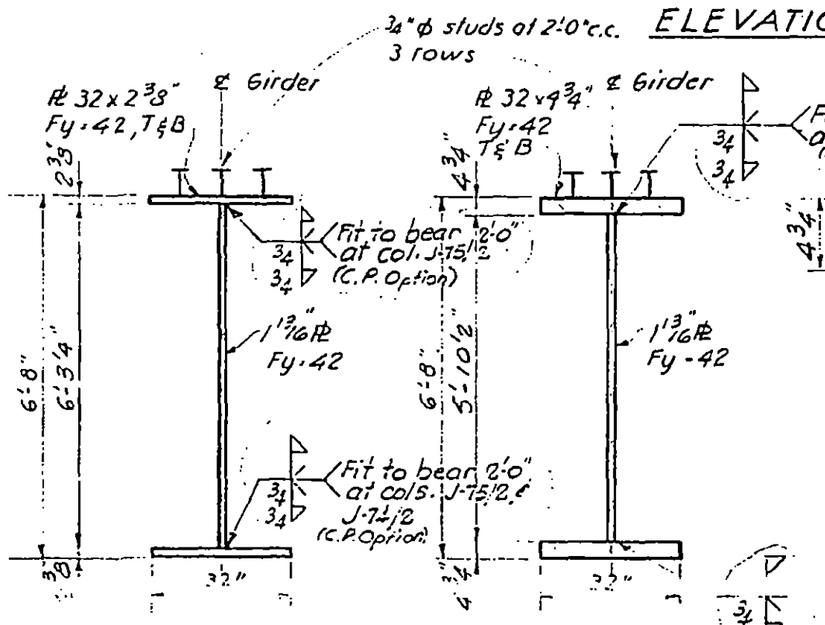

Section a-a Section b-b

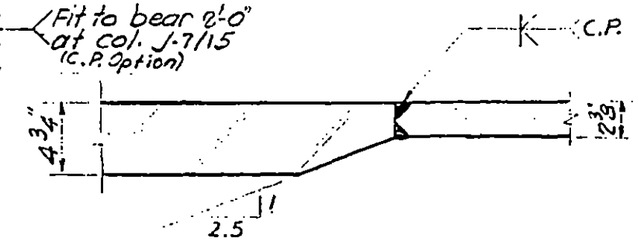

Detail 1

Note:
1. All welds to be E70xx.
2. All bolts to be A325 friction type except as noted.
3. Col. cap ℄ Detail similar to Detail 104 (10-JK2-7).

12-JK2-77

DRAWN S.T.M.
REVIEWED E.L.

LICENSED PROFESSIONAL ENGINEER LESLIE E. ROBERTSON No. 34360 STATE OF NEW YORK

SKILLING - HELLE - CHRISTIANSEN - ROBERTSON Structural & Civil Engineers

PROJECT THE WORLD TRADE CENTER | TITLE DETAIL OF PLATE GIRDER | DATE 5-1-68

REVISIONS

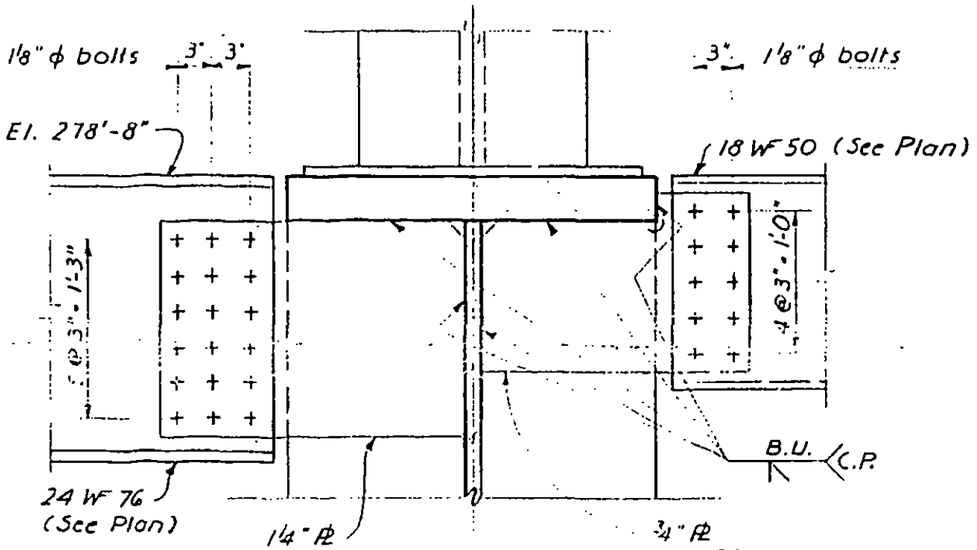

Section c-c

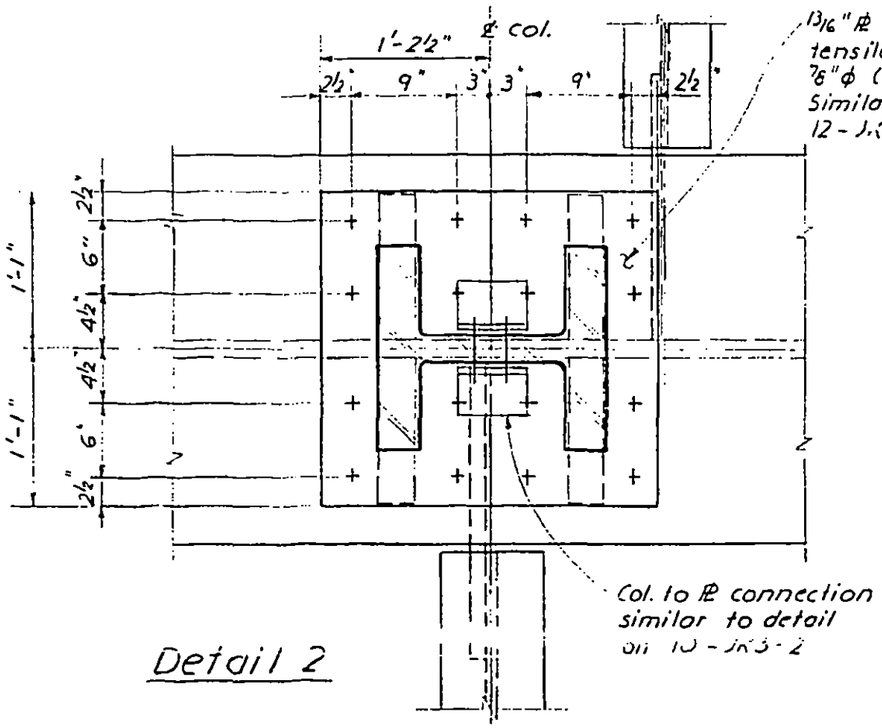

Detail 2

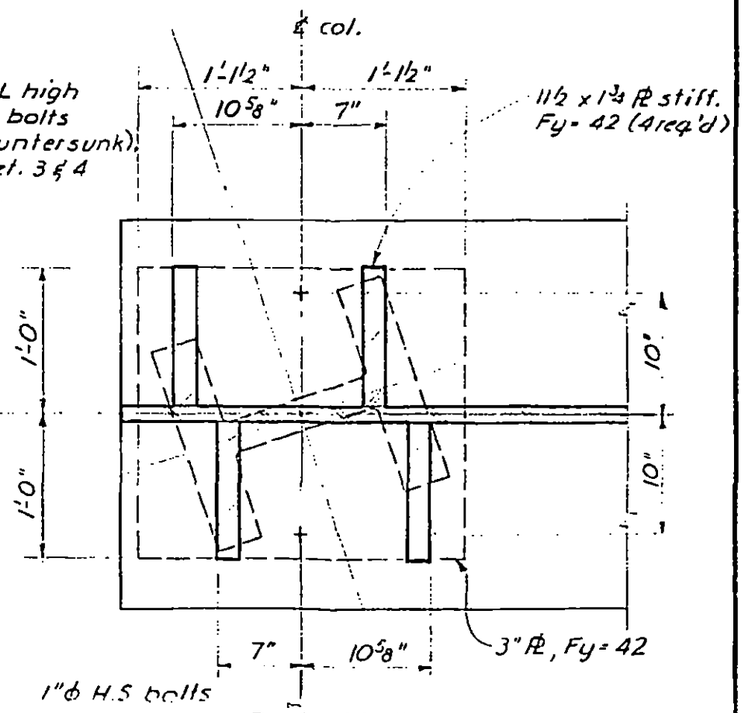

Detail 3

12-JK2-78

LICENSED PROFESSIONAL ENGINEER LESLIE E. ROBERTSON No. 34260 UNIVERSITY OF THE STATE OF NEW YORK

SKILLING - HELLE - CHRISTIANSEN - ROBERTSON Structural & Civil Engineers

PROJECT THE WORLD TRADE CENTER | TITLE DETAIL OF PLATE GIRDER | DATE 5-1-68

REVISIONS

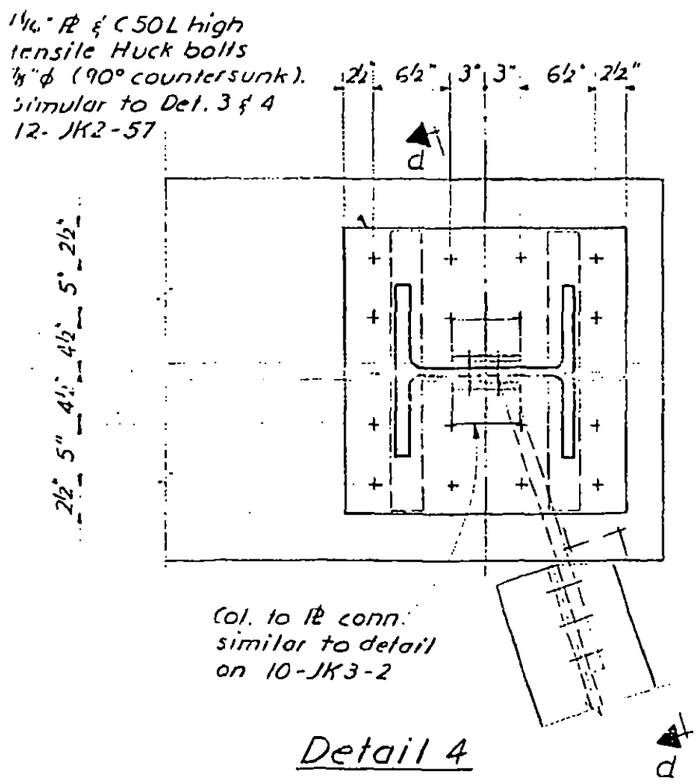

Detail 4

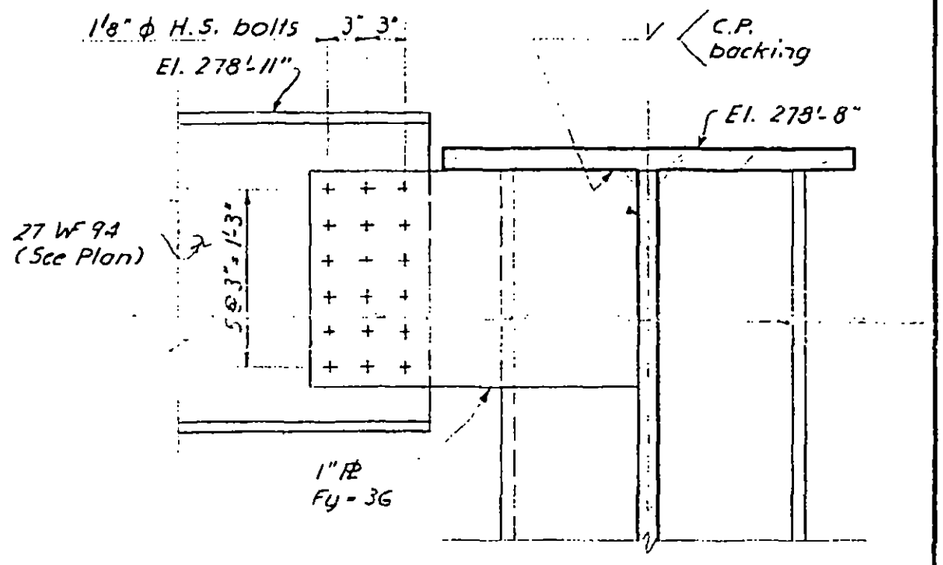

Section d-d

LICENSED PROFESSIONAL ENGINEER LESLIE E. ROBERTSON No. 34360 STATE OF NEW YORK

12-JK2-78A

SKILLING - HELLE - CHRISTIANSEN - ROBERTSON Structural & Civil Engineers

PROJECT THE WORLD TRADE CENTER | TITLE DETAIL OF PLATE GIRDER | DATE 5-1-68

REVISIONS
7-19-68
10-15-68
1-6-69

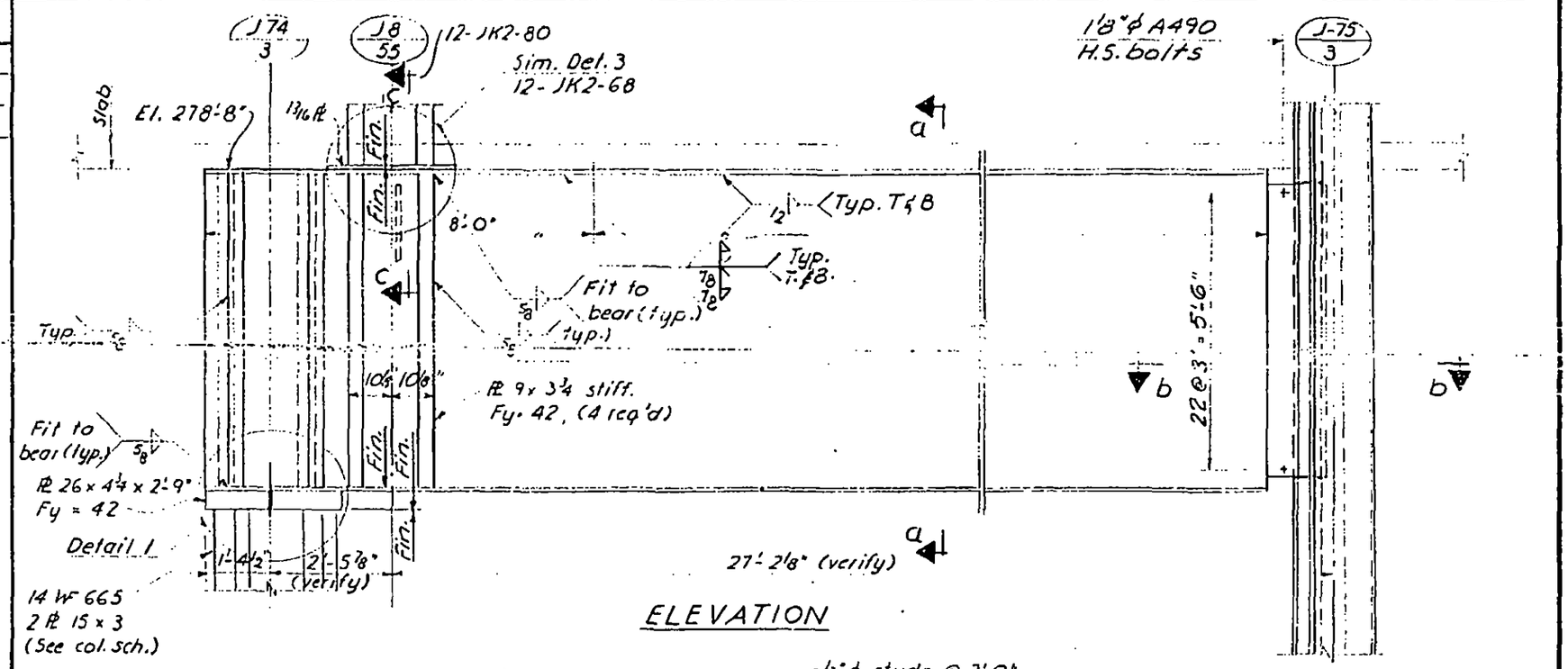

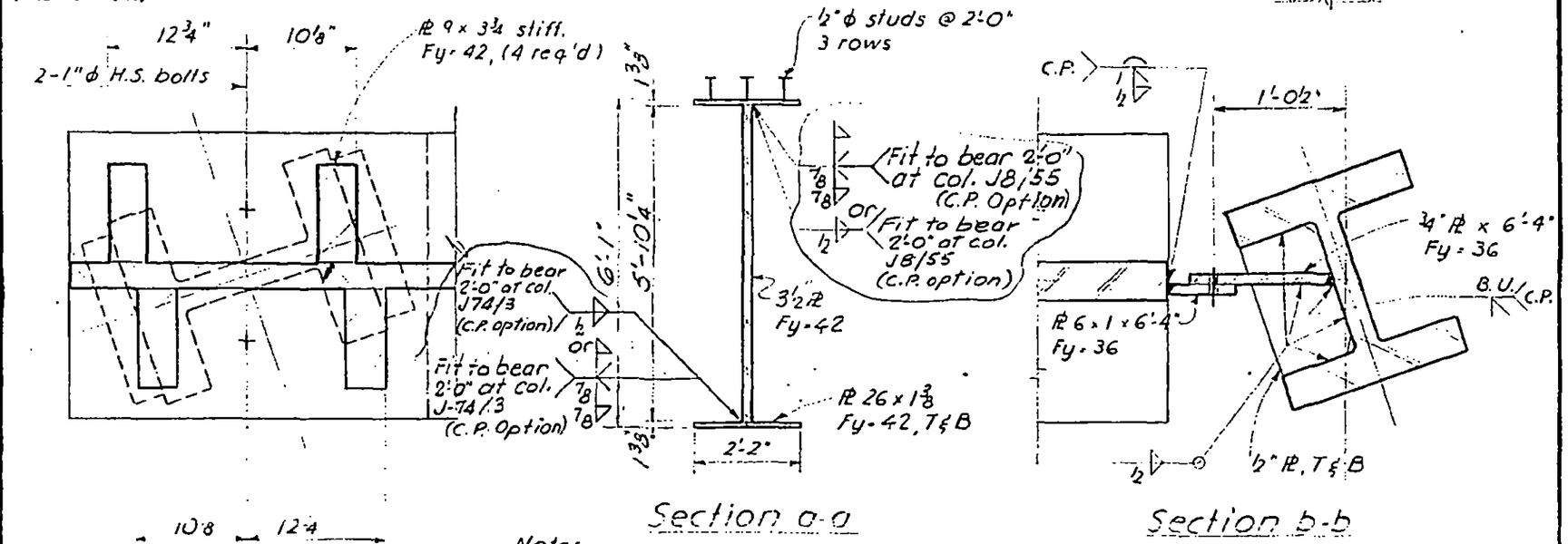

Detail 1

Note:
1. All welds to be E 70 xx.
2. All bolts to be A 325 friction type, unless noted
3. Col. cap PL Detail similar to Detail 104 (10-JK2-7)

DRAWN S.T.M.
REVIEWED E.L.

12-JK2-79

SKILLING - HELLE - CHRISTIANSEN - ROBERTSON Structural & Civil Engineers

PROJECT THE WORLD TRADE CENTER | TITLE DETAIL OF PLATE GIRDER | DATE 5-1-68

REVISIONS

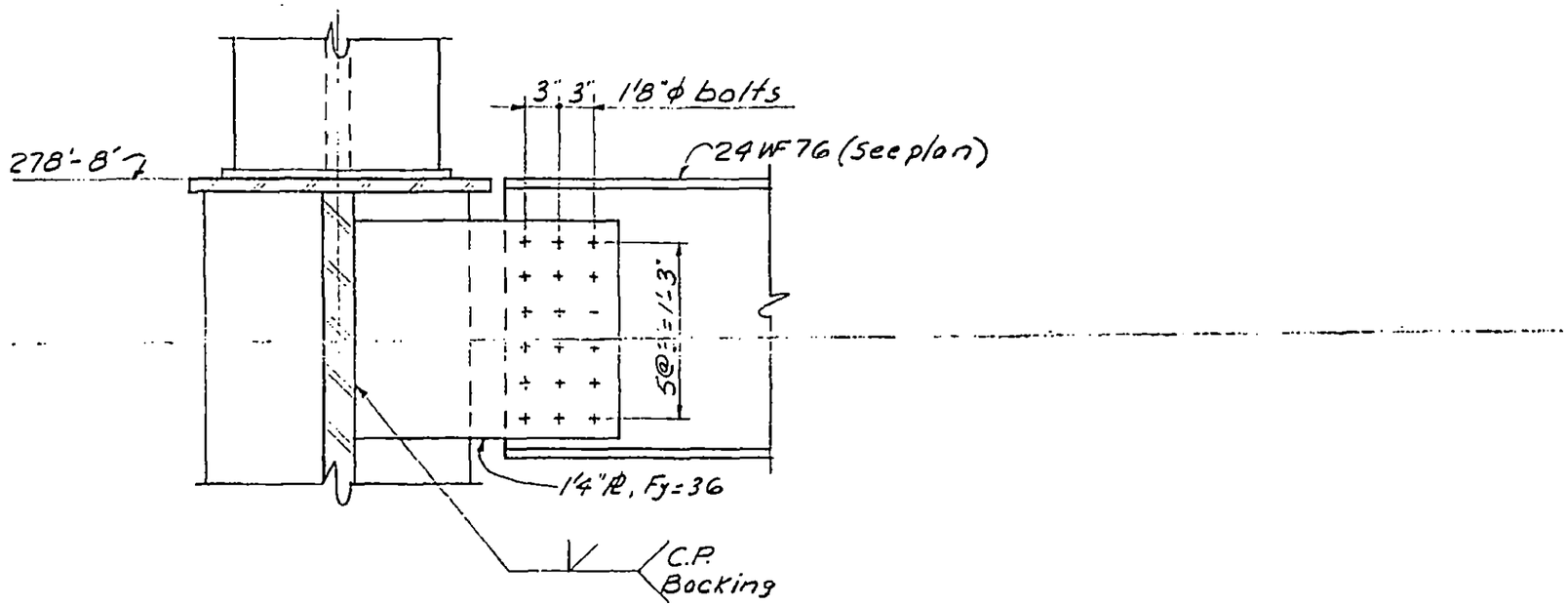

Section c-c

LICENSED TO PRACTICE
LESLIE E. ROBERTSON
No. 34360
UNIVERSITY OF THE STATE OF NEW YORK

12-JK2-80

SKILLING - HELLE - CHRISTIANSEN - ROBERTSON Structural & Civil Engineers

PROJECT THE WORLD TRADE CENTER | TITLE DETAIL OF PLATE GIRDER | DATE 6-7-68

REVISIONS
7-19-68
1-6-69

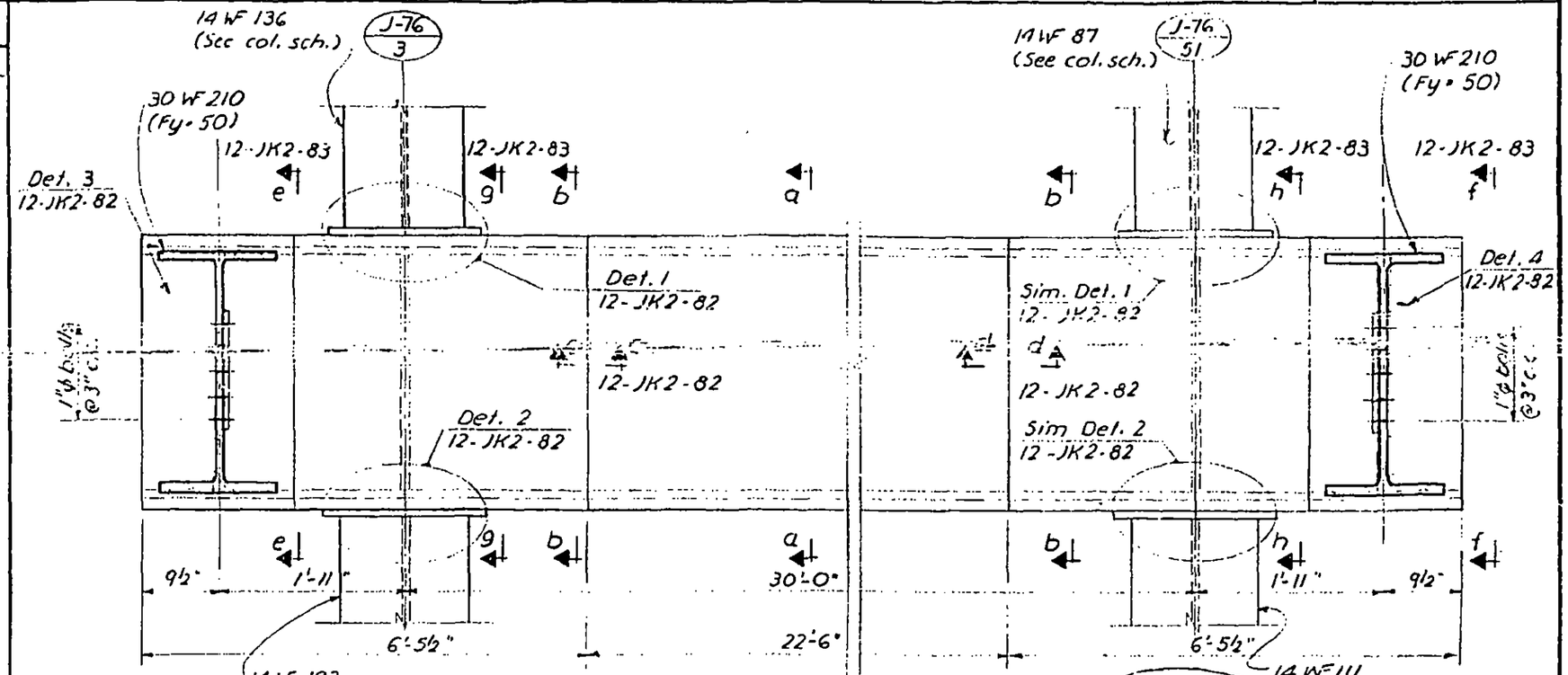

ELEVATION

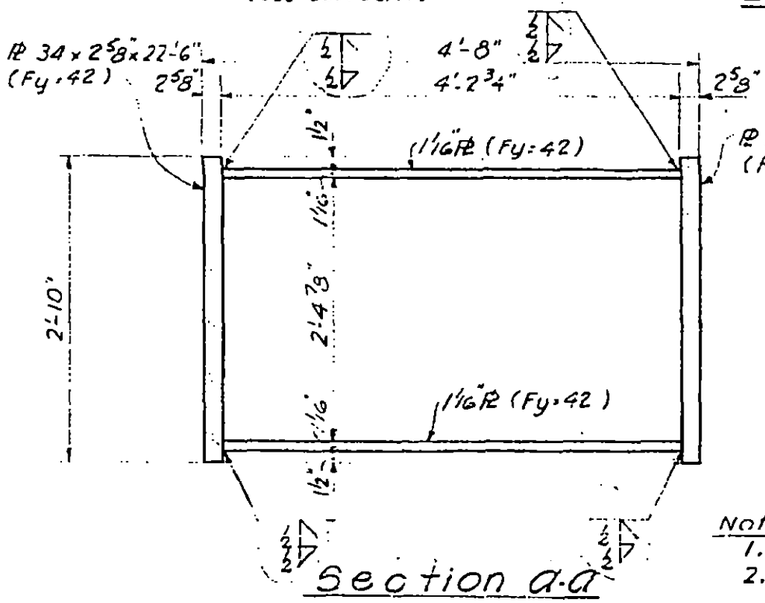

Section a-a

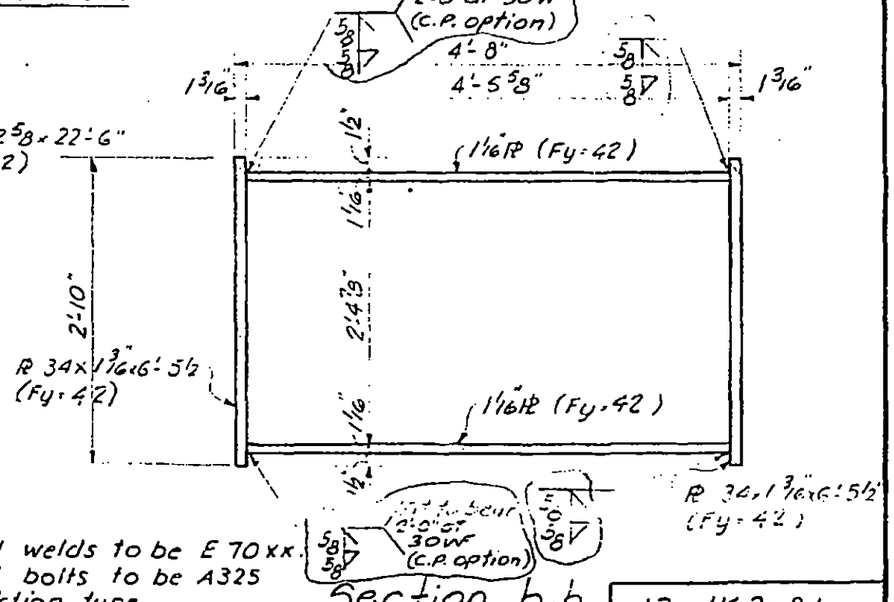

Section b-b

Notes:
1. All welds to be E 70 xx.
2. All bolts to be A325 friction type.

DRAWN S.T.M.
REVIEWED E.L.

12-JK2-81

SKILLING - HELLE - CHRISTIANSEN - ROBERTSON Structural & Civil Engineers

PROJECT THE WORLD TRADE CENTER | TITLE DETAIL OF PLATE GIRDER | DATE 6-7-68

REVISIONS

7-19-68

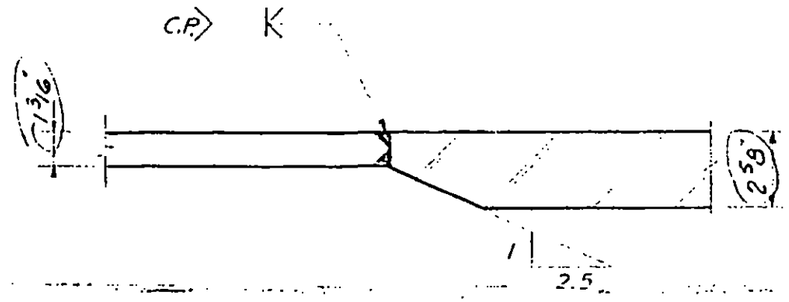

Section c-c (as shown)
Section d-d (opp. hand)

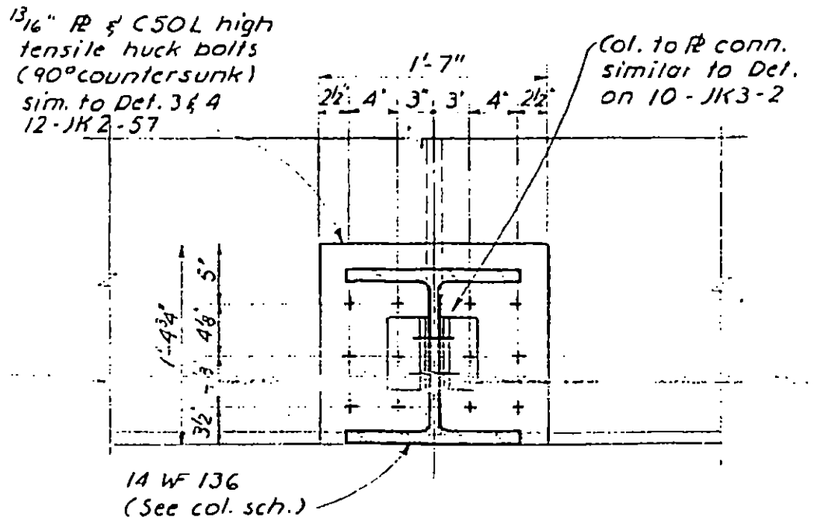

Detail 1

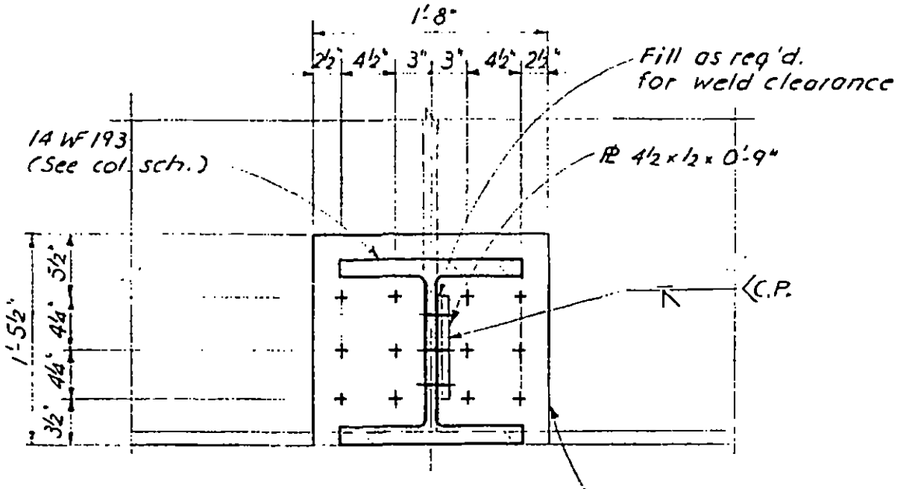

Detail 2
(looking up)

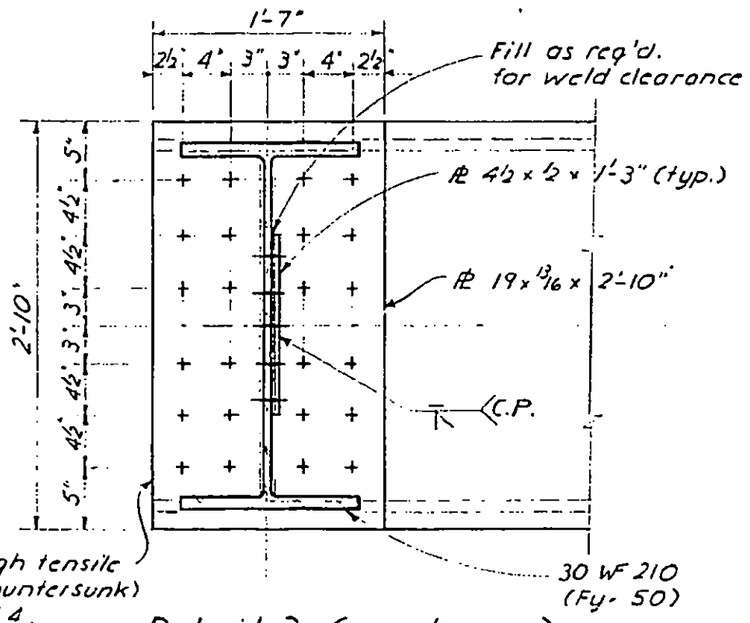

Detail 3 (as shown)
Detail 4 (opp. hand)

Notes:
1. All welds to be E70xx.
2. All bolts to be A325 friction type.

LICENSED PROFESSIONAL ENGINEER
LESLIE E. ROBERTSON
No. 34360
UNIVERSITY OF THE STATE OF NEW YORK

12-JK2-82

SKILLING - HELLE - CHRISTIANSEN - ROBERTSON Structural & Civil Engineers

PROJECT THE WORLD TRADE CENTER | TITLE DETAIL OF PLATE GIRDER | DATE 6-7-68

REVISIONS
7-19-68
4-4-69

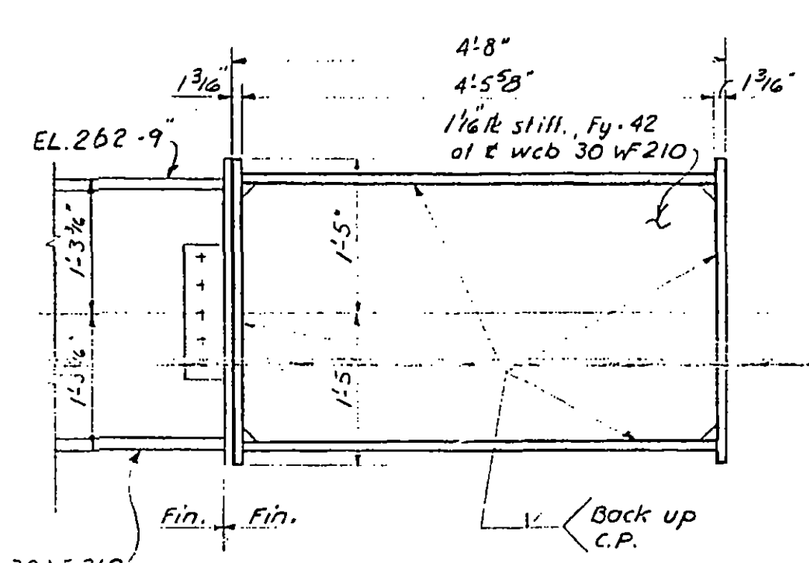

Section e-e (as shown)
Section f-f (opp. hand)

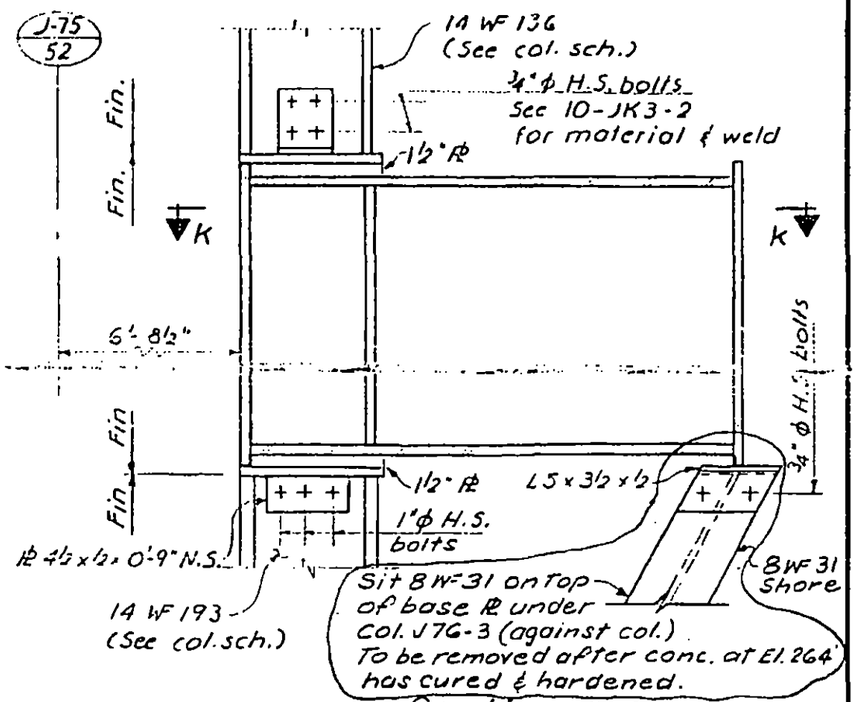

Section g-g

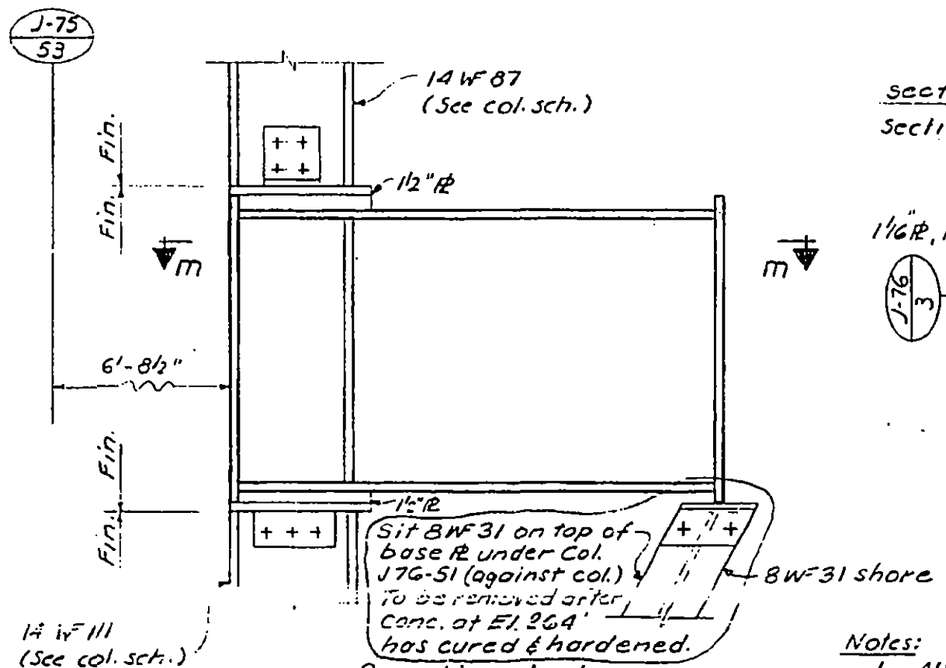

Section h-h
(Details not shown same as Sect. g-g)

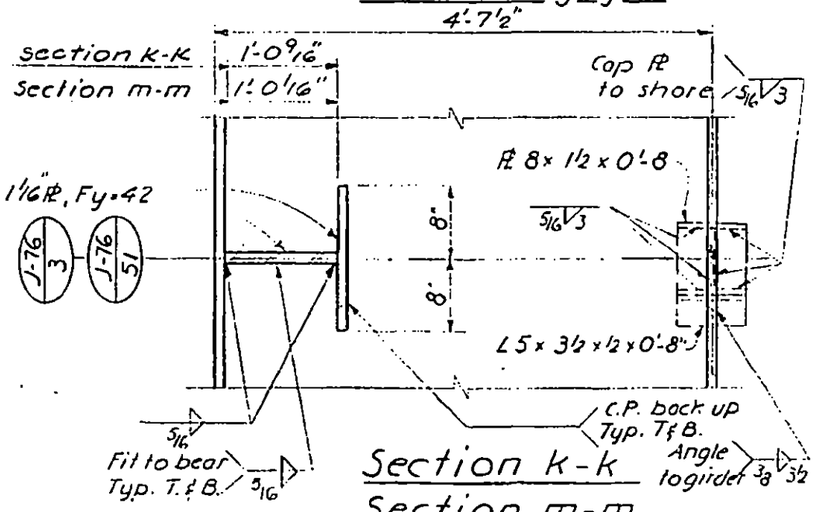

Section k-k
Section m-m

Notes:
1. All welds to be E 70xx
2. All bolts to be A325 friction type.

12-JK2-83

LICENSED PROFESSIONAL ENGINEER
LESLIE E. ROBERTSON
No. 34360
UNIVERSITY OF THE STATE OF NEW YORK

DRAWN
S.C.
REVIEWED
E.L.

SKILLING - HELLE - CHRISTIANSEN - ROBERTSON Structural & Civil Engineers

PROJECT THE WORLD TRADE CENTER | TITLE GIRDER DETAIL | DATE 6-7-68

REVISIONS
6-28-68
10-15-68

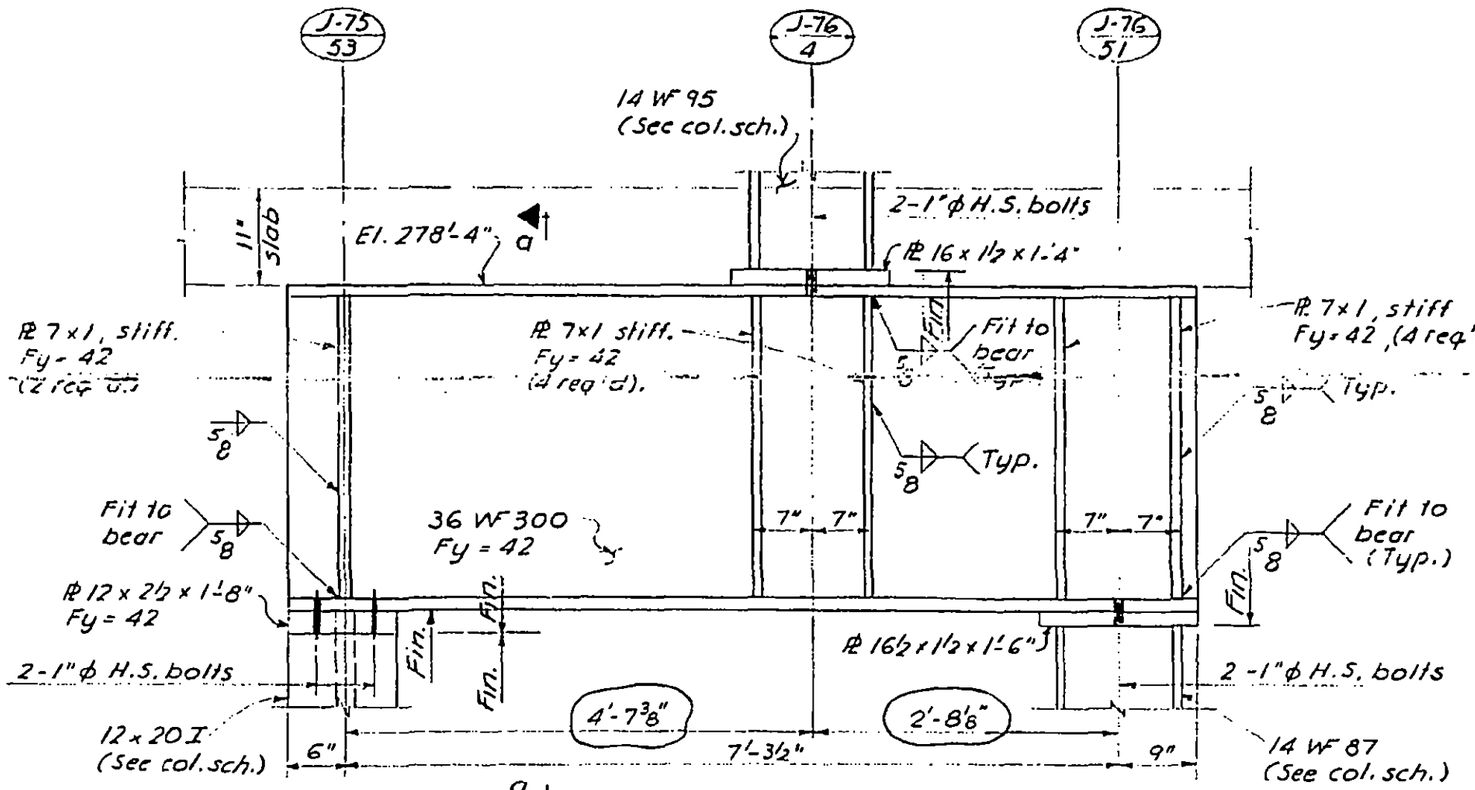

ELEVATION

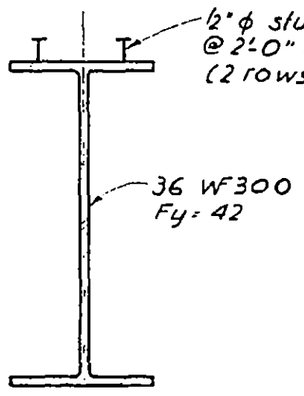

Section a-a

Notes:
1. All welds to be E 70 xx.
2. All bolts to be A-325 friction type.
3. Col. cap PL detail similar to Detail on 10-JK2-7.

LICENSED PROFESSIONAL ENGINEER
LESLIE E. ROBERTSON
No. 34360
UNIVERSITY OF THE STATE OF NEW YORK

12-JK2-84

SKILLING - HELLE - CHRISTIANSEN - ROBERTSON Structural & Civil Engineers

PROJECT THE WORLD TRADE CENTER | TITLE DETAIL OF PLATE GIRDER | DATE 6-7-68

REVISIONS
7-19-68
1-6-69

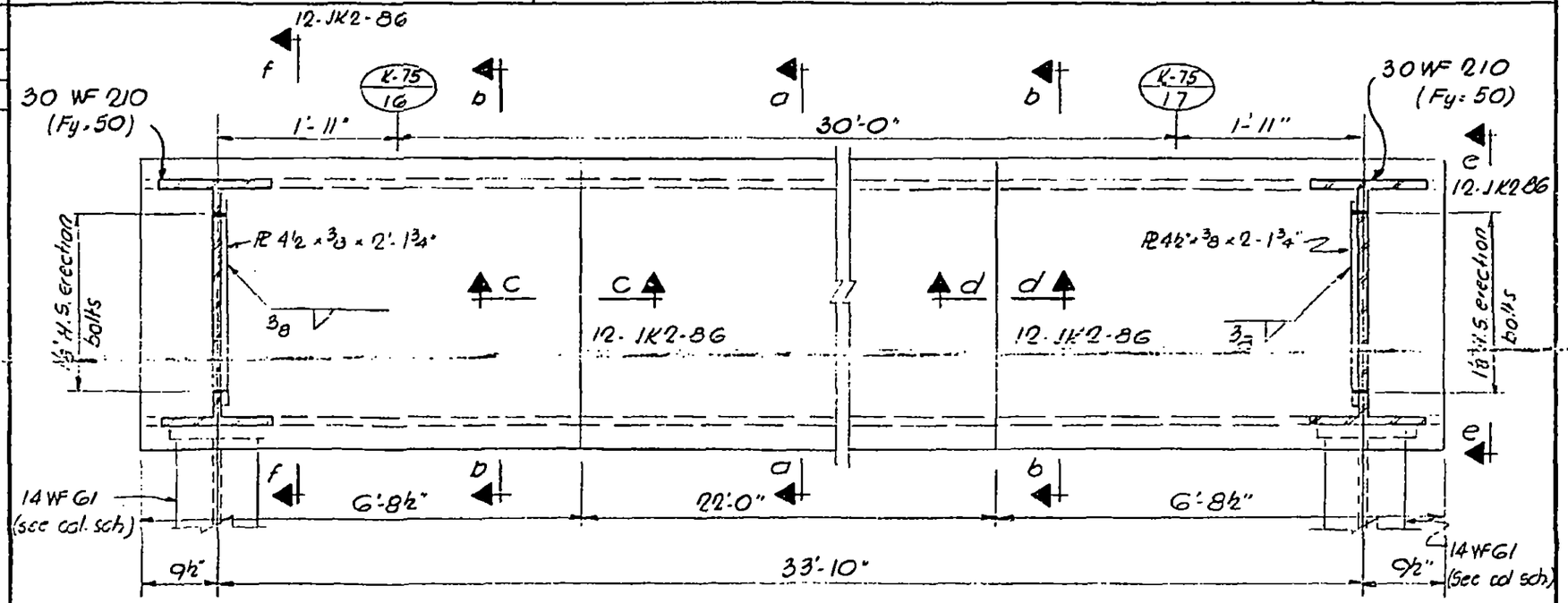

Elevation

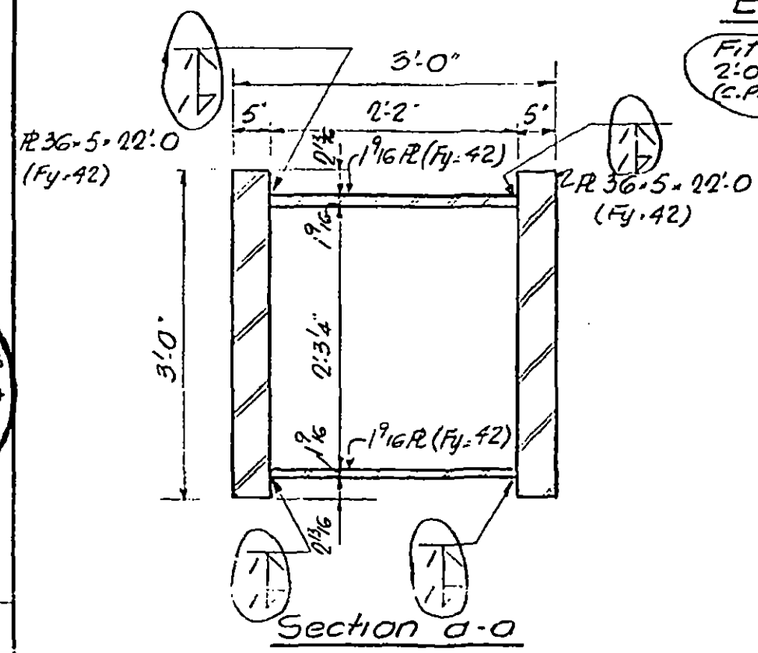

Section a-a

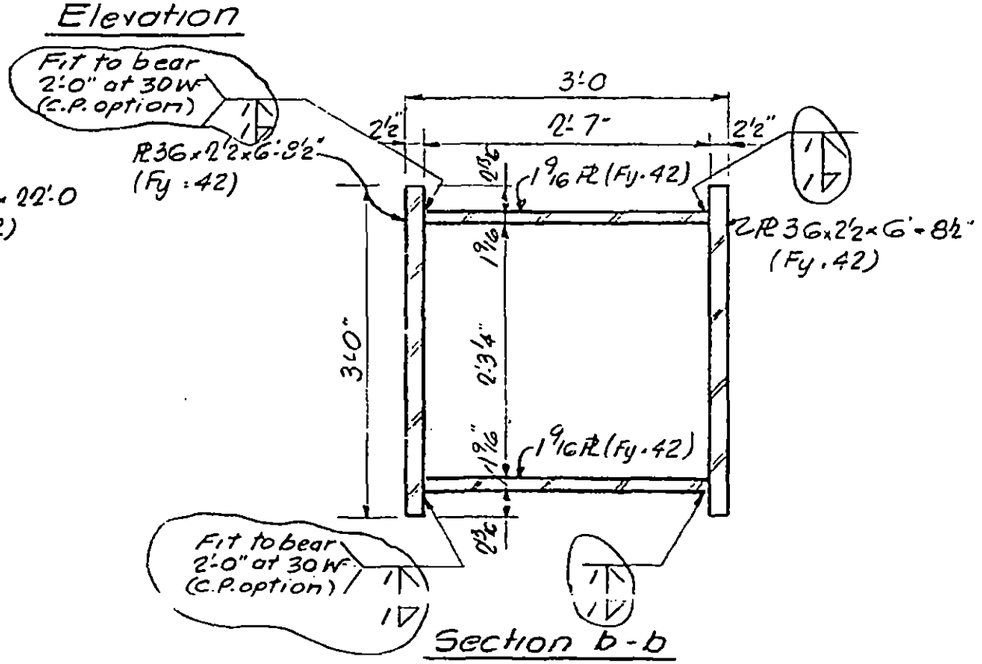

Section b-b

LICENSED PROFESSIONAL ENGINEER
LESLIE E. ROBERTSON
No. 34360
UNIVERSITY OF THE STATE OF NEW YORK

DRAWN A.F.
REVIEWED E.L.

12-JK2-85

SKILLING - HELLE - CHRISTIANSEN - ROBERTSON Structural & Civil Engineers

PROJECT THE WORLD TRADE CENTER | TITLE DETAIL OF PLATE GIRDER | DATE 6-7-68

REVISIONS

7-19-68

12-3-68

2-11-70

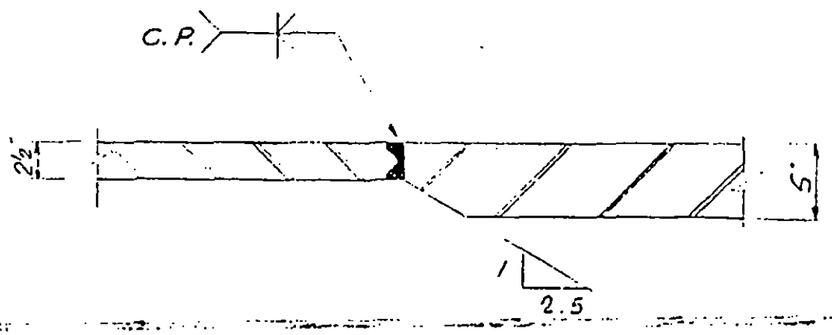

Section c-c (as shown)

Section d-d (opp hand)

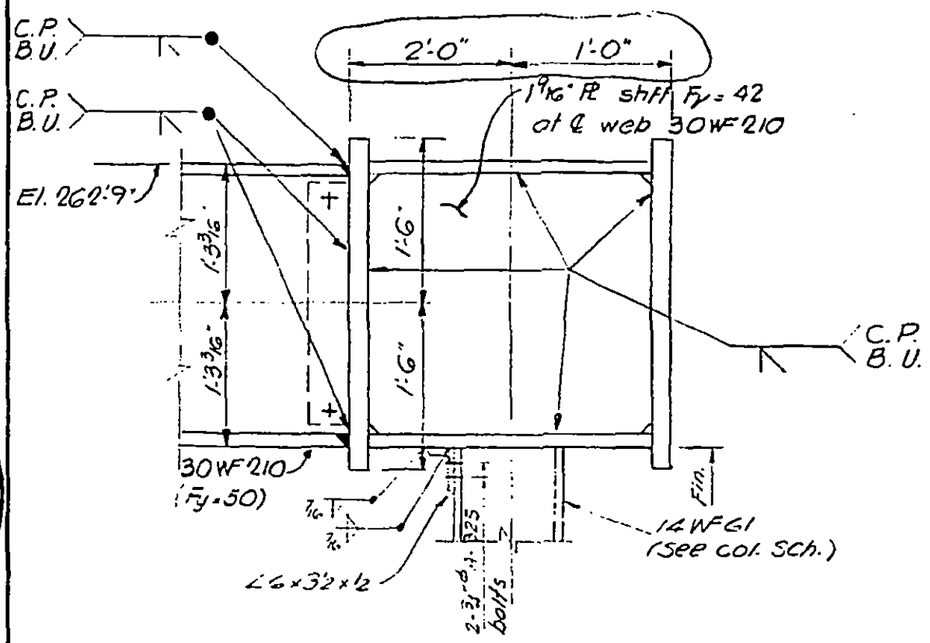

Section e-e (as shown)

Section f-f (opp hand)

Note:
See also, Dwg. SK-4-1-284 (12-22-69)
(Change No. 533.058)

LICENSED PROFESSIONAL ENGINEER
LESLIE E. ROBERTSON
No. 34360
UNIVERSITY OF THE STATE OF NEW YORK

S.C.

REVIEWED
E.L.

12-JK2-86

SKILLING - HELLE - CHRISTIANSEN - ROBERTSON Structural & Civil Engineers

PROJECT THE WORLD TRADE CENTER | TITLE DETAIL OF PLATE GIRDER | DATE 6-11-68

REVISIONS

7-19-68

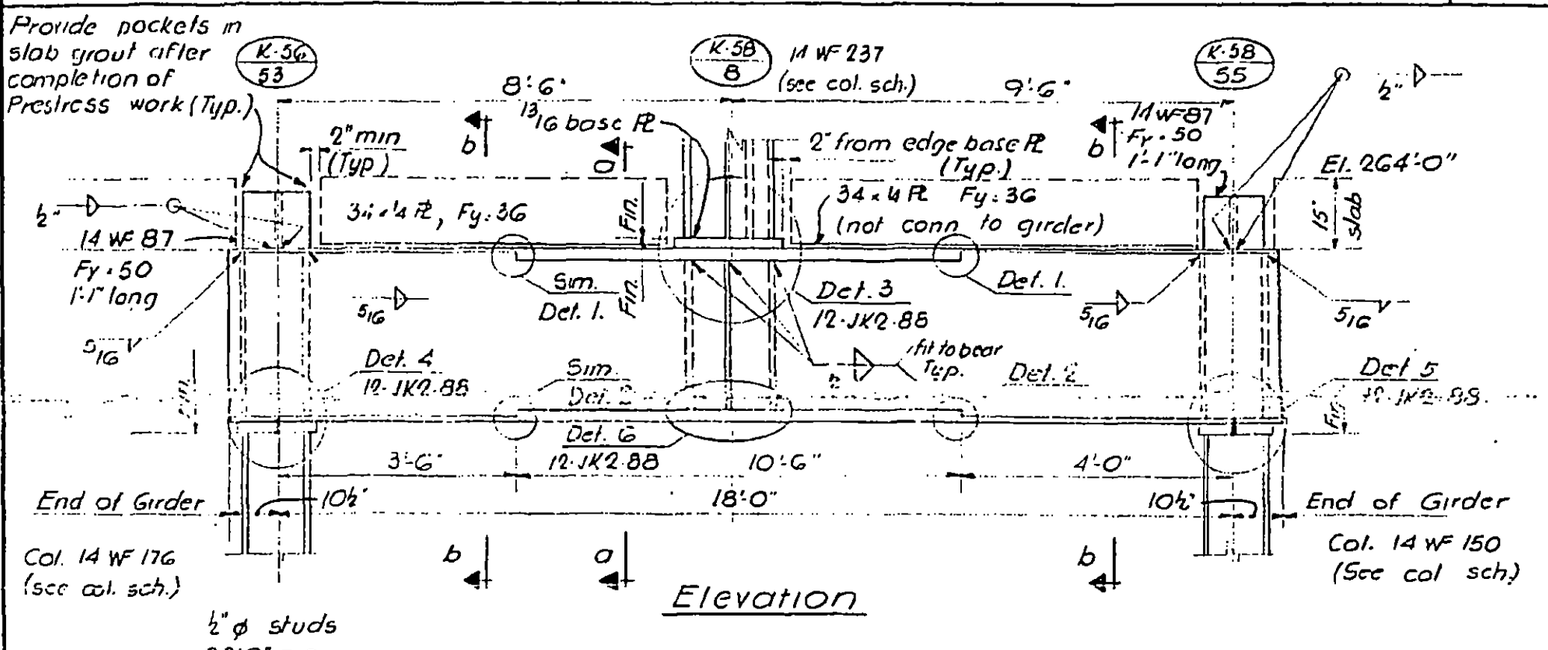

Notes

1. All welds to be E 70 xx
2. All bolts to be A 325 friction type, unless noted
3. Col. cap Pl. Detail similar to Detail 104 (10-JK2-7)

LICENSED PROFESSIONAL ENGINEER LESLIE E. ROBERTSON No. 34360 UNIVERSITY OF THE STATE OF NEW YORK

12-JK2-87

SKILLING - HELLE - CHRISTIANSEN - ROBERTSON Structural & Civil Engineers

PROJECT THE WORLD TRADE CENTER | TITLE DETAIL OF PLATE GIRDER | DATE 6-11-68

REVISIONS

7-19-68

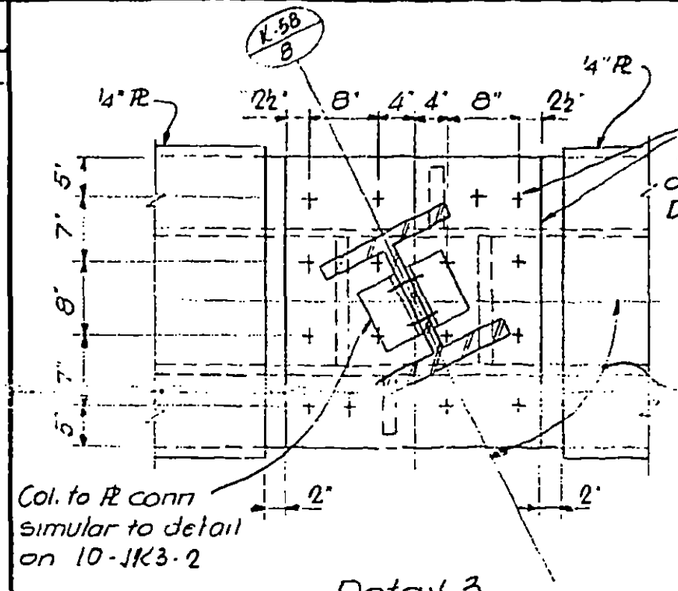

Detail 3

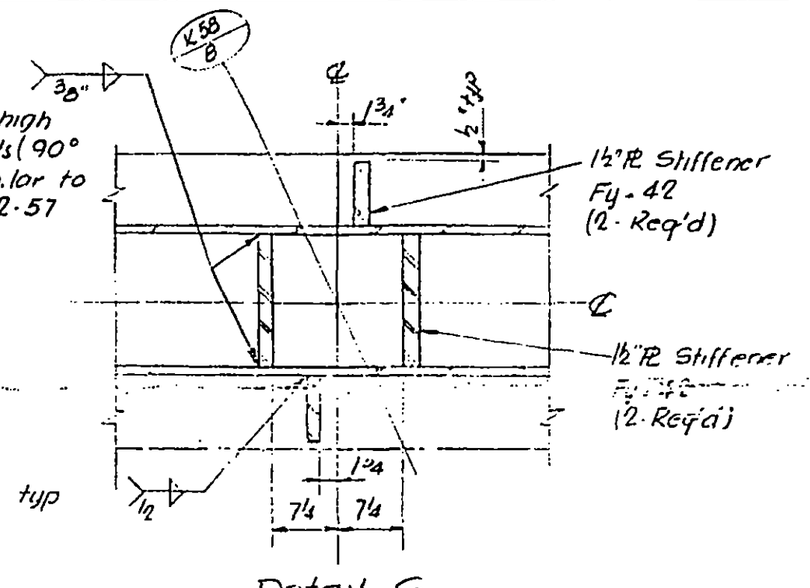

Detail 6

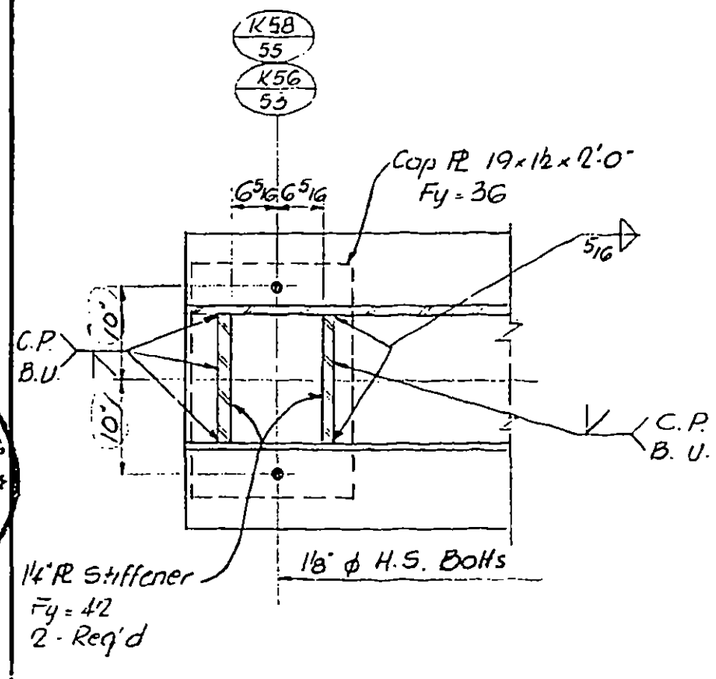

Detail 4 (as shown)
Detail 5 (opp hand)

Notes

1. All welds to be E 70 xx
2. All bolts to be A325 friction type, unless noted
3. Col. cap PL Det. similar to Det 104 (10-JK2-7)

LICENSED PROFESSIONAL ENGINEER
LESLIE E. ROBERTSON
No. 34360
UNIVERSITY OF THE STATE OF NEW YORK

12-JK2-88

SKILLING, HELLE, CHRISTIANSEN, ROBERTSON — Structural & Civil Engineers

PROJECT THE WORLD TRADE CENTER | TITLE DETAIL OF PLATE GIRDER | DATE 6-11-68

REVISIONS
7-19-68
1-6-69

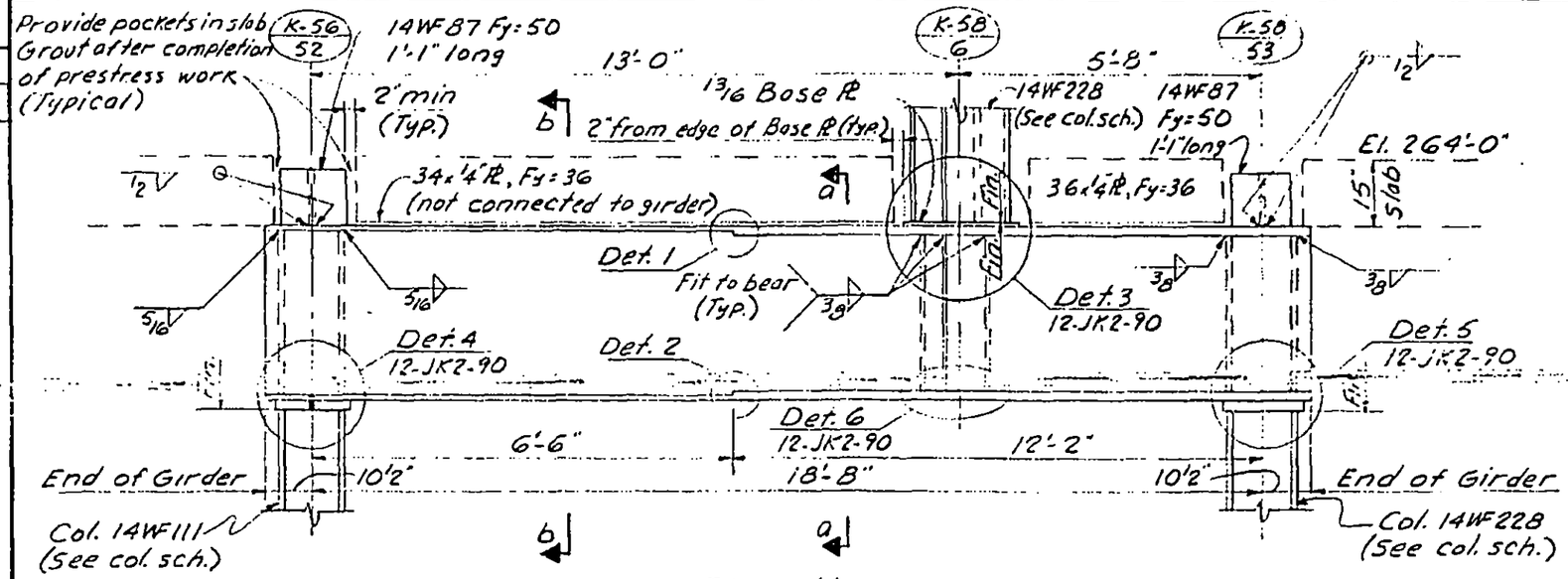

Elevation

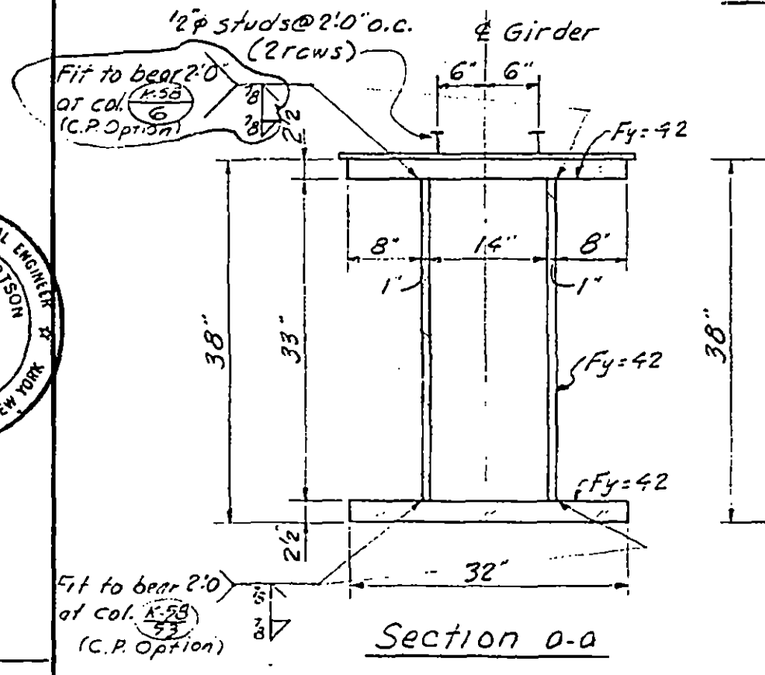

Section a-a

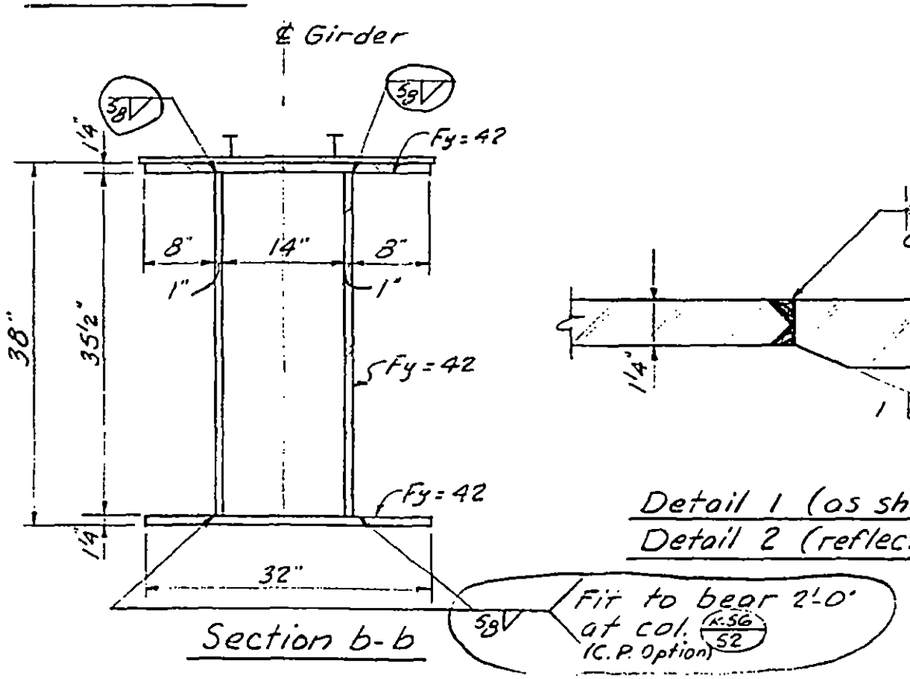

Section b-b

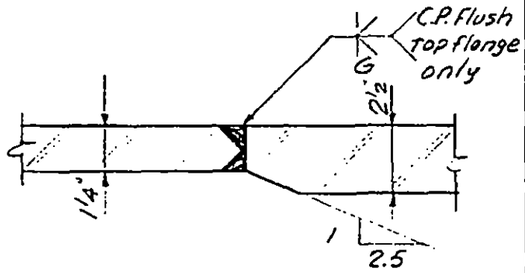

Detail 1 (as shown)
Detail 2 (reflected)

Notes:
1. All welds to be E70xx
2. All bolts to be A325 friction type, unless noted.
3. Col. cap & Detail similar to Detail 104 (10-JK2-7)

LICENSED PROFESSIONAL ENGINEER
LESLIE E. ROBERTSON
No. 34360
UNIVERSITY OF THE STATE OF NEW YORK

DESIGNED
DRAWN A.F.
REVIEWED E.L.

12-JK2-89

SKILLING - HELLE - CHRISTIANSEN - ROBERTSON Structural & Civil Enginoors

PROJECT THE WORLD TRADE CENTER | TITLE DETAIL OF PLATE GIRDER | DATE 6-11-68

REVISIONS

7-19-68

Detail 3

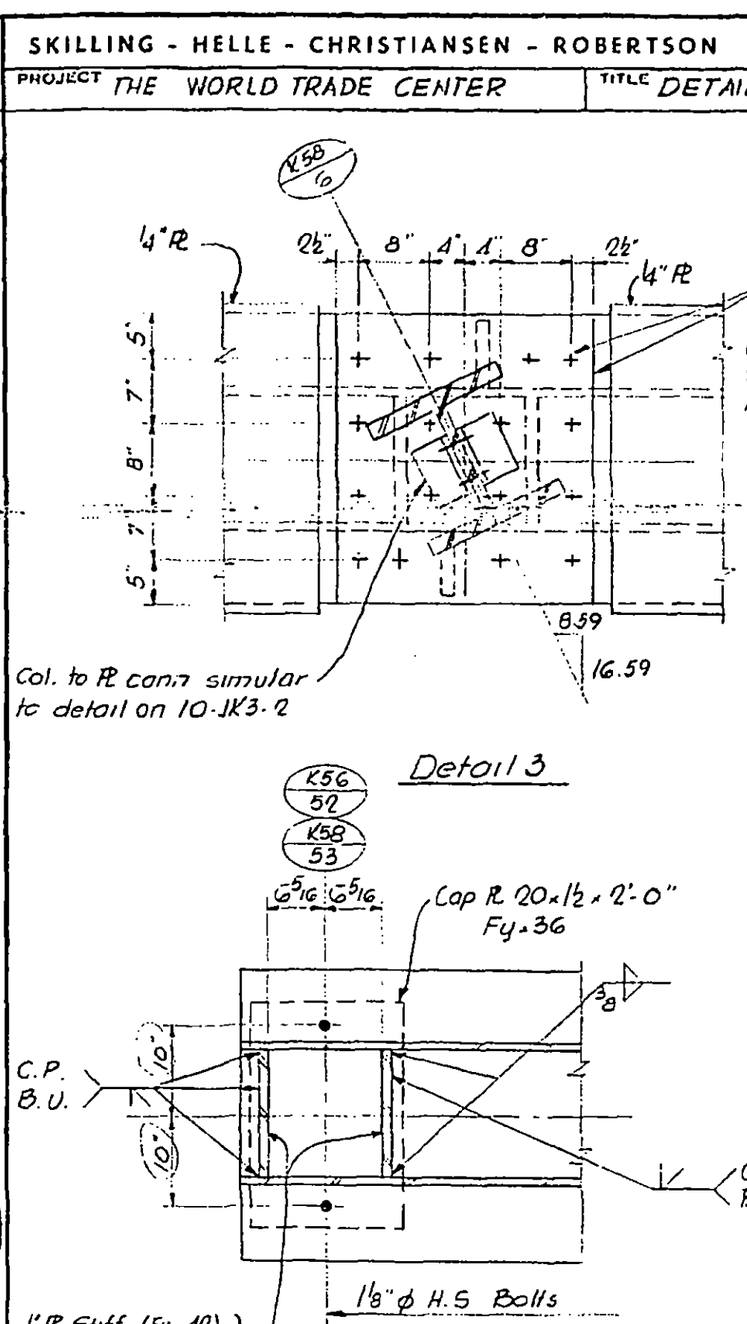

Detail 4 (as shown)
Detail 5 (opp hand)

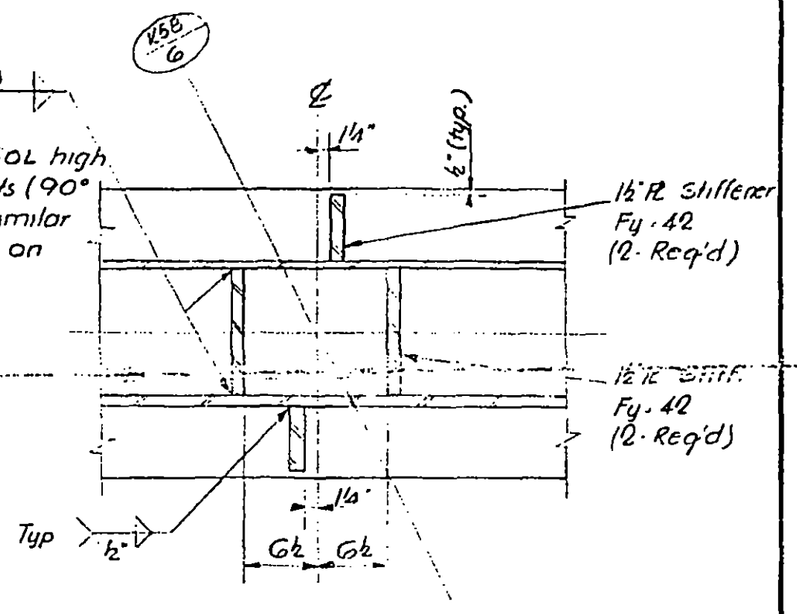

Detail 6

Notes:

1. All welds to be E 70 xx
2. All bolts to be A325 friction type, unless shown
3. Col. cap PL Det. similar to Det. 104 (10-JK2-7)

LICENSED PROFESSIONAL ENGINEER
LESLIE E. ROBERTSON
No. 34360
UNIVERSITY OF THE STATE OF NEW YORK

12-JK2-90

SKILLING - HELLE - CHRISTIANSEN - ROBERTSON Structural & Civil Engineers

PROJECT THE WORLD TRADE CENTER | TITLE DETAIL OF PLATE GIRDER | DATE 6-11-68

REVISIONS
7-19-68
1-6-69

Provide pockets in slab. Grout after completion of prestress work (Typ)

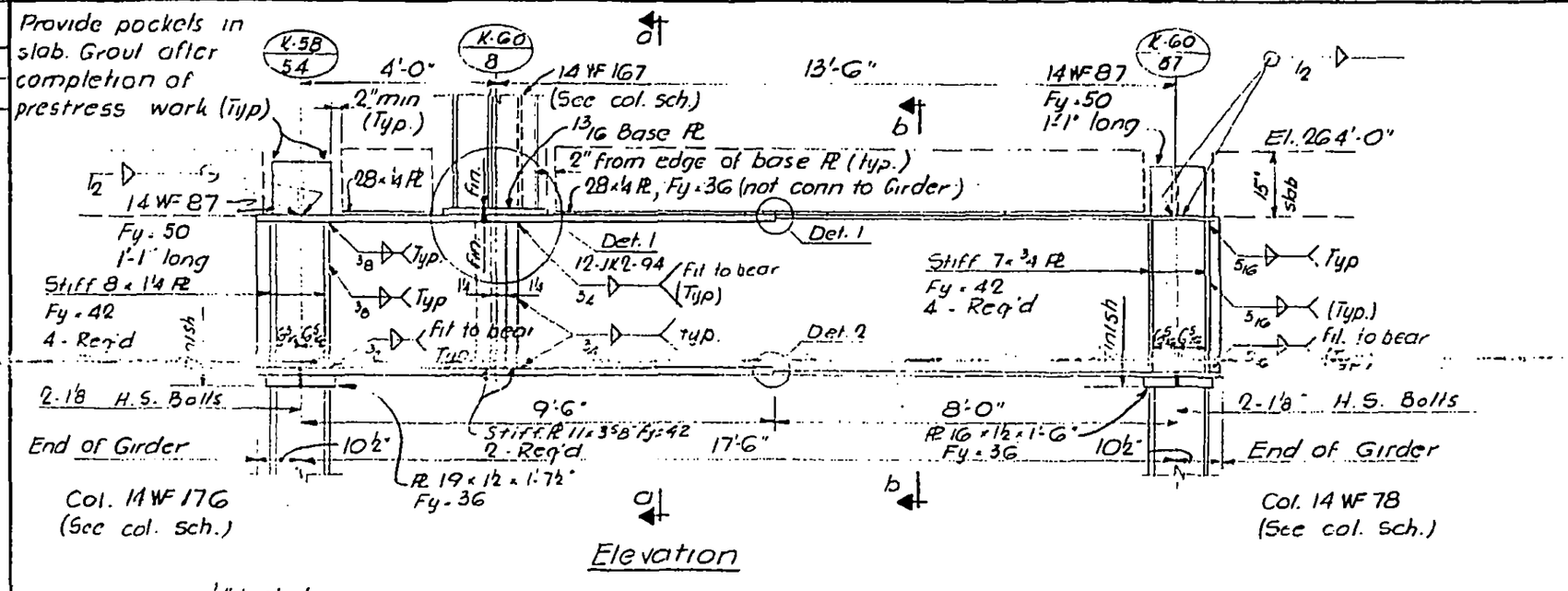

Elevation

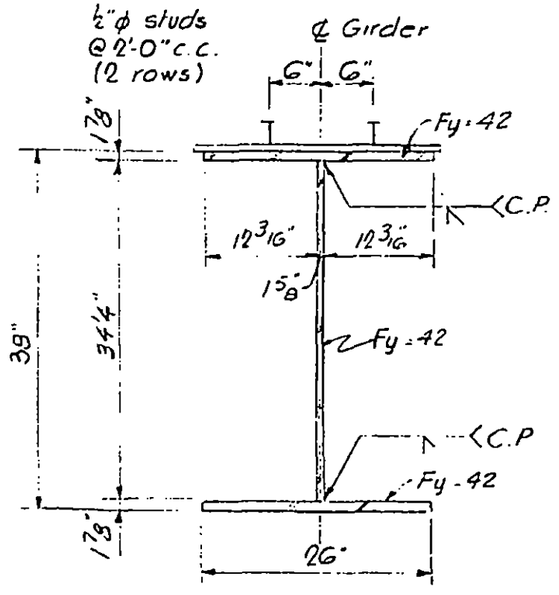

Section a-a

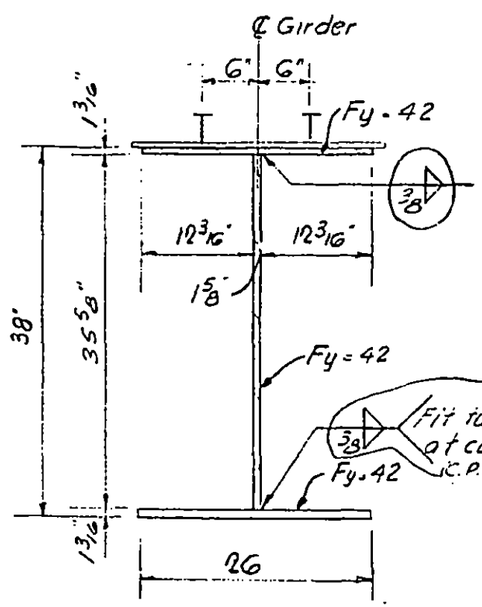

Section b-b

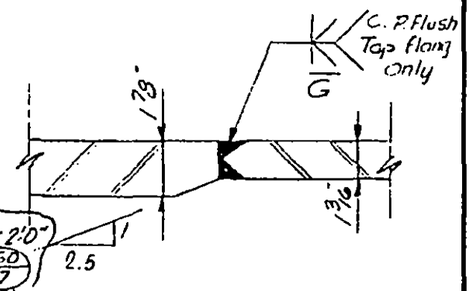

Detail 1 (as shown)
Detail 2 (reflected)

Notes.
1. All welds to be E 70 xx
2. All bolts to be A 325 friction type, unless noted
3 Col. cap Pl Detail similar to Detail 104 (10-JK2-7)

LICENSED PROFESSIONAL ENGINEER LESLIE E. ROBERTSON No. 34360 UNIVERSITY OF THE STATE OF NEW YORK

DRAWN A.F.
REVIEWED E.L.

12-JK2-91

SKILLING - HELLE - CHRISTIANSEN - ROBERTSON Structural & Civil Engineers

PROJECT THE WORLD TRADE CENTER | TITLE DETAIL OF PLATE DETAIL | DATE 6-11-68

REVISIONS
7-19-68
9-4-68
1-6-69
2-19-69

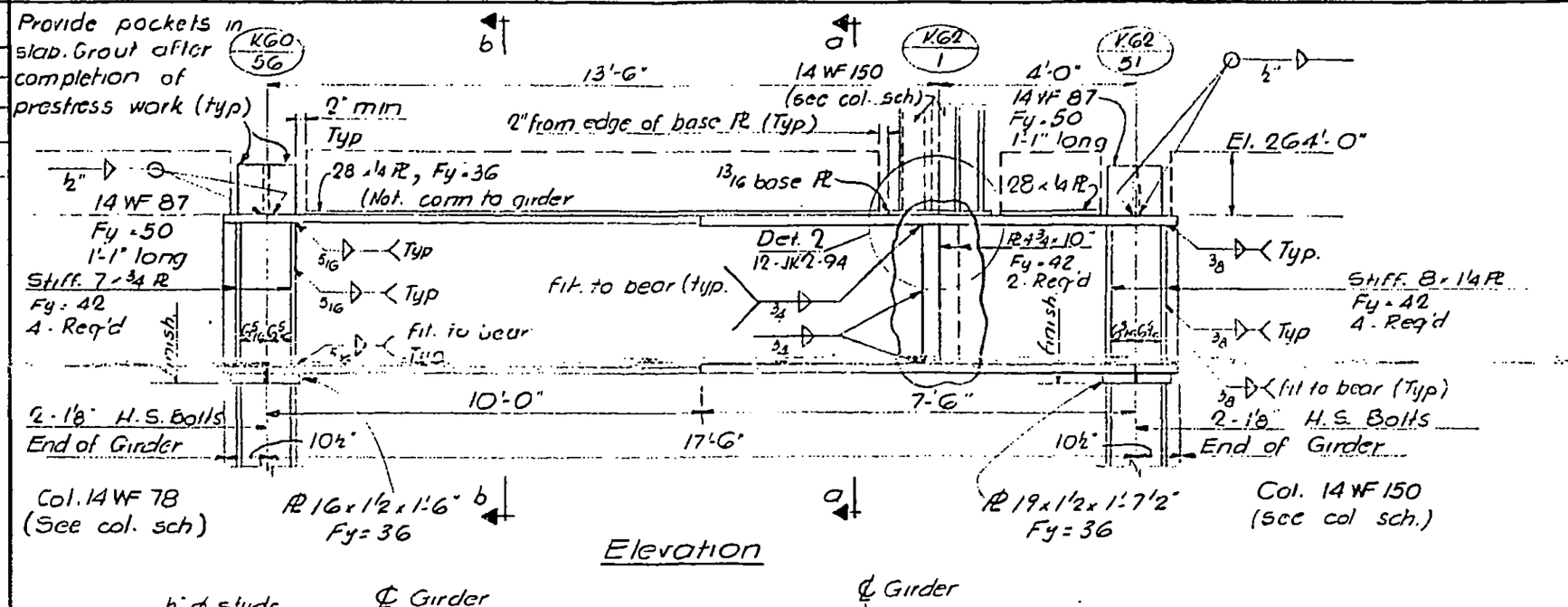

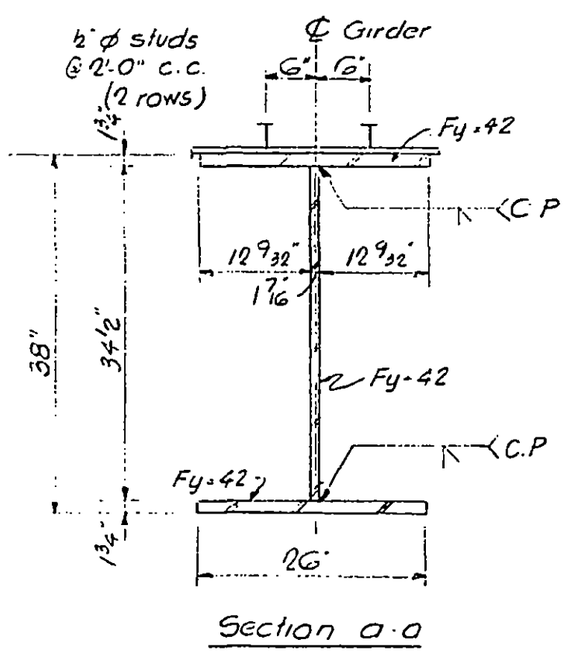

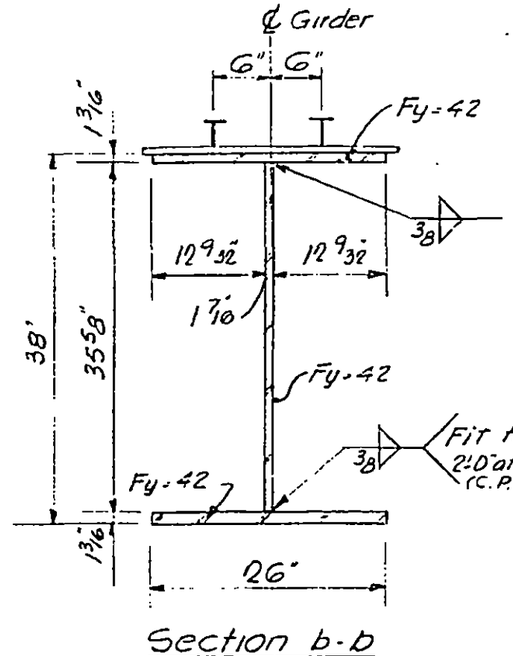

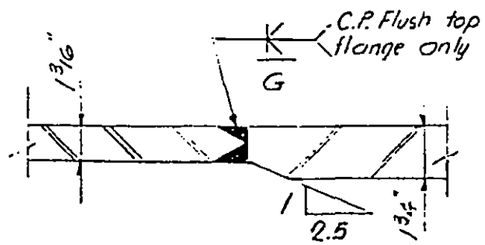

LICENSED PROFESSIONAL ENGINEER LESLIE E. ROBERTSON No. 34360 UNIVERSITY OF THE STATE OF NEW YORK

Notes:
1. All welds to be E 70 xx
2. All bolts to be A 325 friction type, unless noted
3. Col. cap PL Detail similar to Detail 104 (10-JK2-7)

DRAWN A.F.
REVIEWED E.L.

12-JK2-92

SKILLING - HELLE - CHRISTIANSEN - ROBERTSON Structural & Civil Engineers

PROJECT THE WORLD TRADE CENTER | TITLE DETAIL OF PLATE GIRDER | DATE 6-11-68

REVISIONS
7-19-68
9-4-68

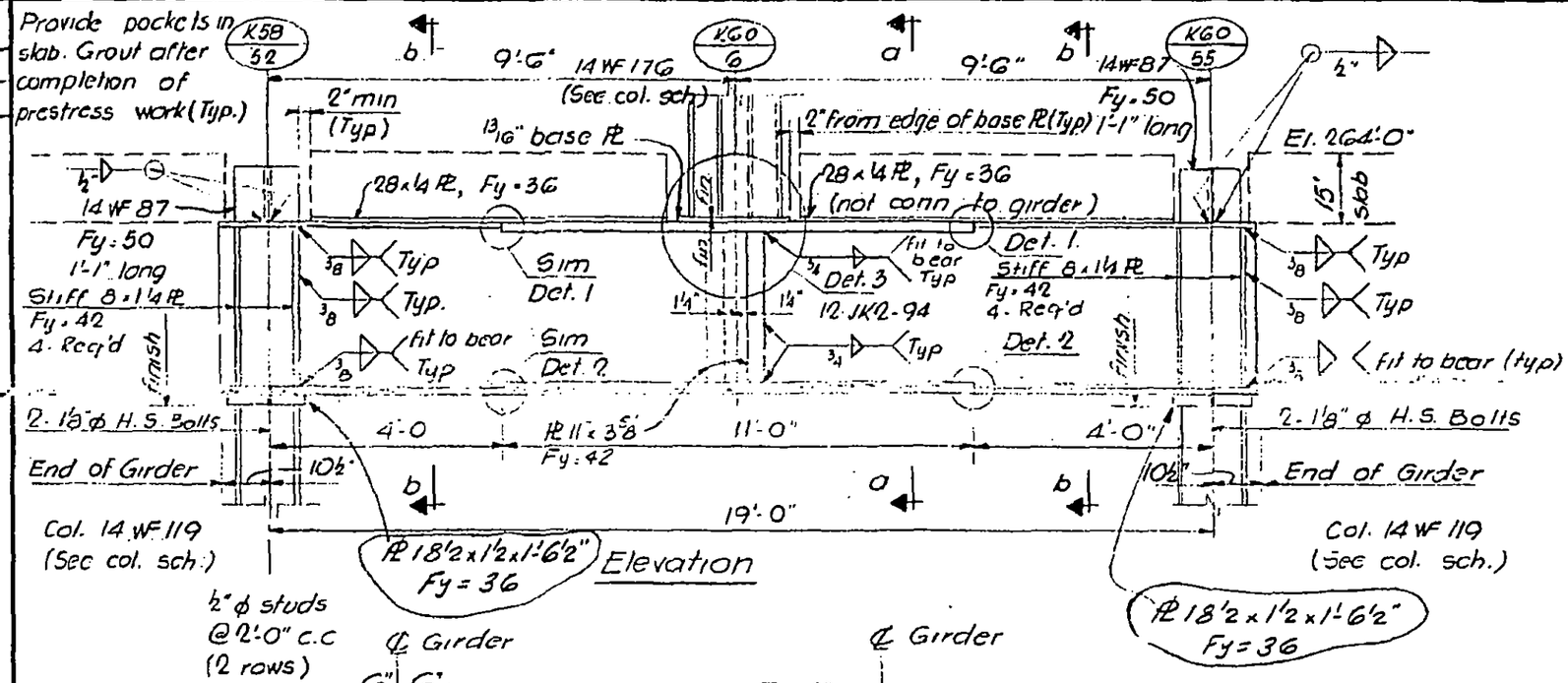

Notes:

1. All welds to be E70xx
2. All bolts to be A325 friction type, unless noted
3. Col. cap Pl Detail similar to Detail 104 (10-JK2-7)

12-JK2-93

LICENSED PROFESSIONAL ENGINEER
LESLIE E. ROBERTSON
No. 34360
STATE OF NEW YORK

SKILLING - HELLE - CHRISTIANSEN - ROBERTSON Structural & Civil Engineers

PROJECT THE WORLD TRADE CENTER | TITLE DETAIL OF PLATE GIRDER | DATE 6-11-68

REVISIONS

7-19-68

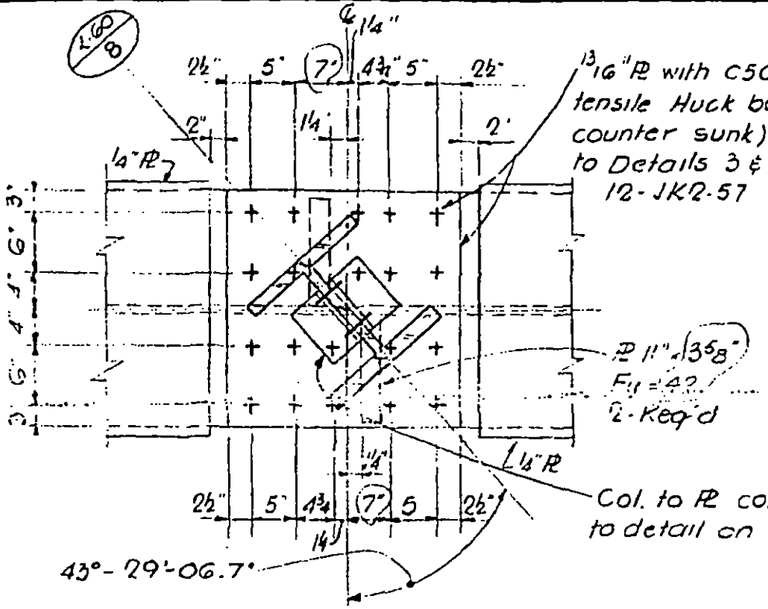

(For 12-JK2-91)

Detail 1

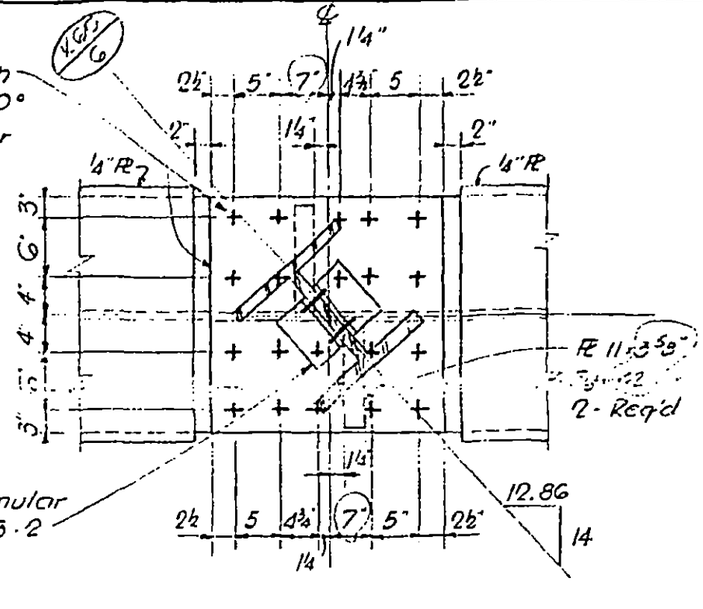

(For 12-JK2-93)

Detail 3

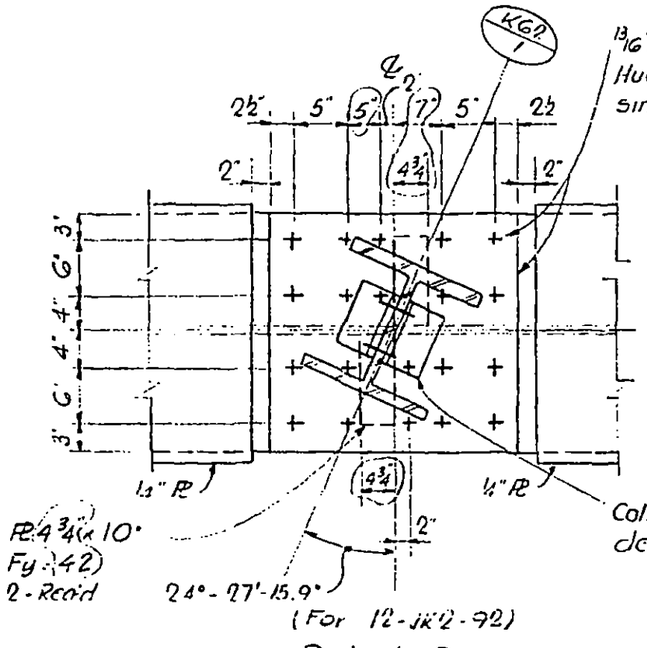

(For 12-JK2-92)

Detail 2

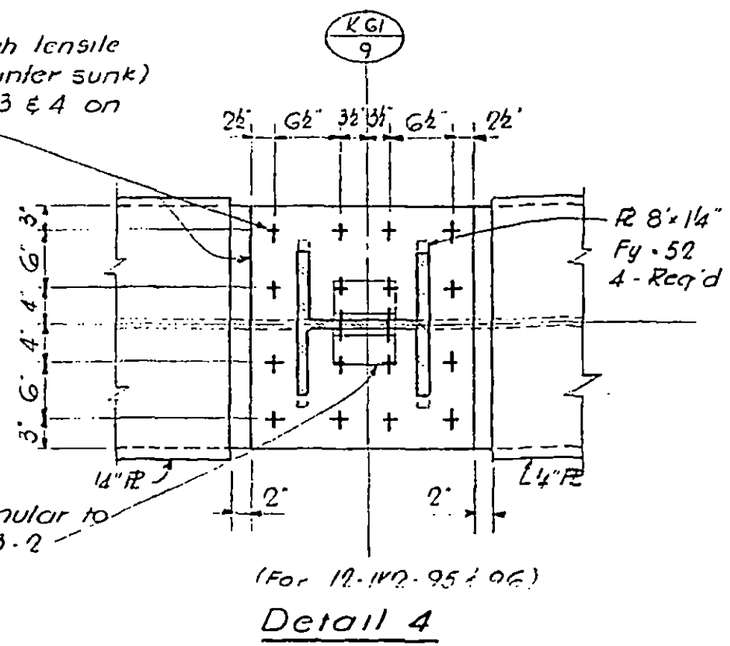

(For 12-JK2-95 & 96)

Detail 4

LICENSED PROFESSIONAL ENGINEER LESLIE E. ROBERTSON No. 34360 STATE OF NEW YORK

12-JK2-94

SKILLING - HELLE - CHRISTIANSEN - ROBERTSON Structural & Civil Engineers

PROJECT THE WORLD TRADE CENTER | TITLE DETAIL OF PLATE GIRDER | DATE 6-11-68

REVISIONS
7-19-68
9-4-68
1-6-69

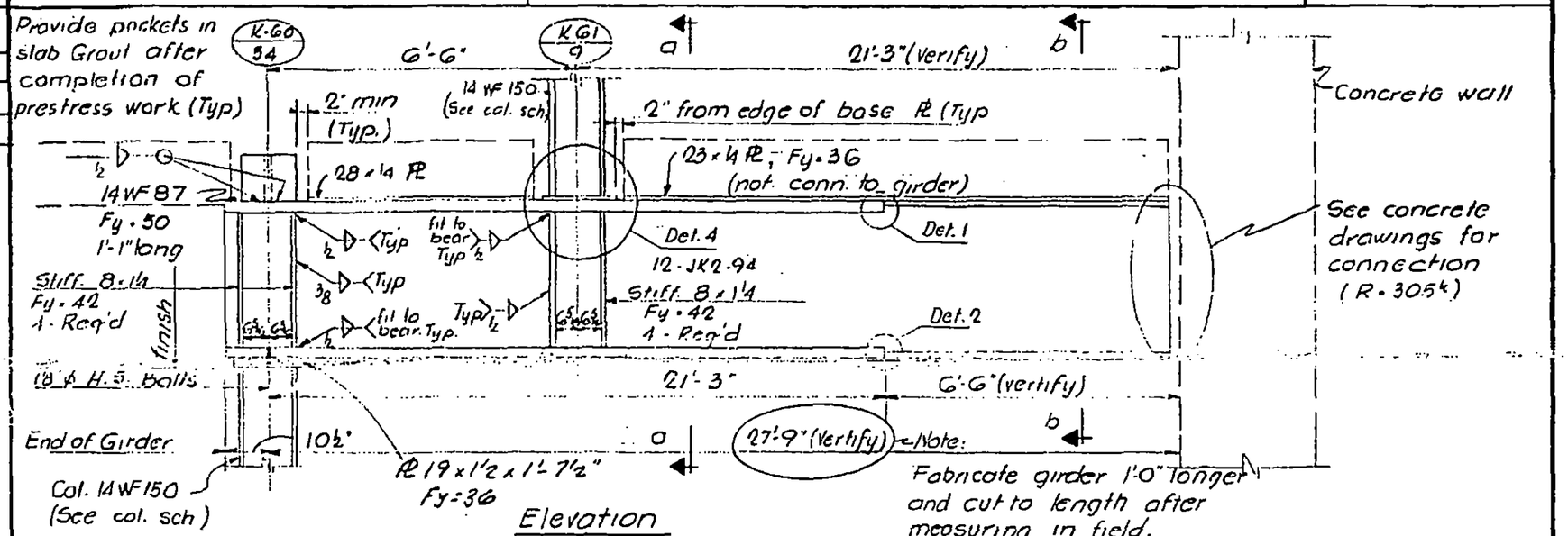

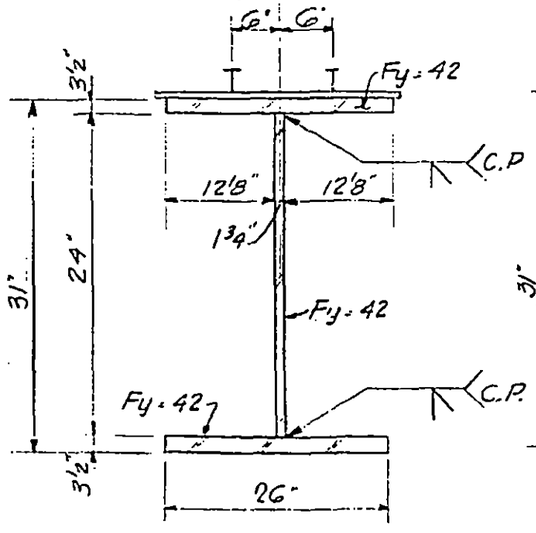

Section a-a

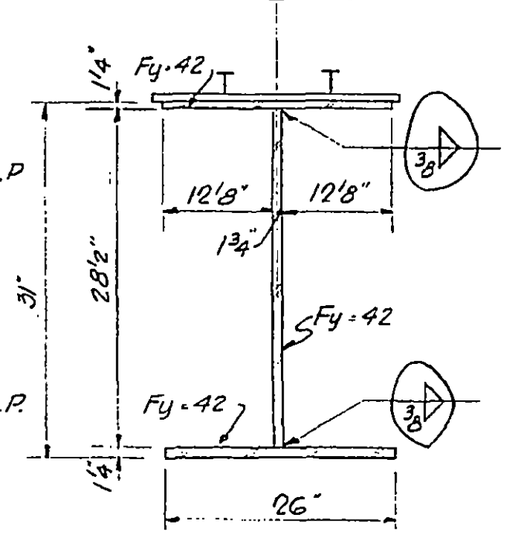

Section b-b

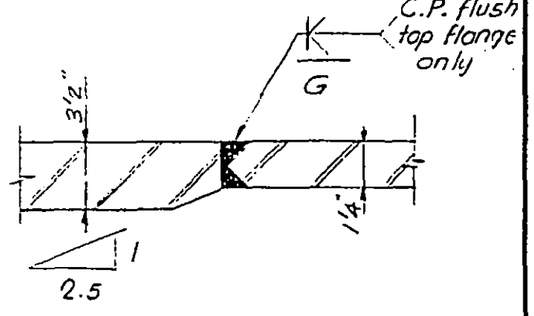

Detail 1 (as shown)
Detail 2 (reflected)

LICENSED PROFESSIONAL ENGINEER
LESLIE E. ROBERTSON
No. 34360
STATE OF NEW YORK

DRAWN A.F.
REVIEWED E.L.

NOTES:
1. All welds to be E 70 x x
2. All bolts to be A 325 friction type, unless shown
3. Col. cap ℄ Detail similar to Detail 104 (10-JK2-7)

12-JK2-95

SKILLING - HELLE - CHRISTIANSEN - ROBERTSON Structural & Civil Engineers

PROJECT THE WORLD TRADE CENTER | TITLE DETAIL OF PLATE GIRDER | DATE 6-11-68

REVISIONS
7-19-68
9-4-68
10-15-68
1-6-69

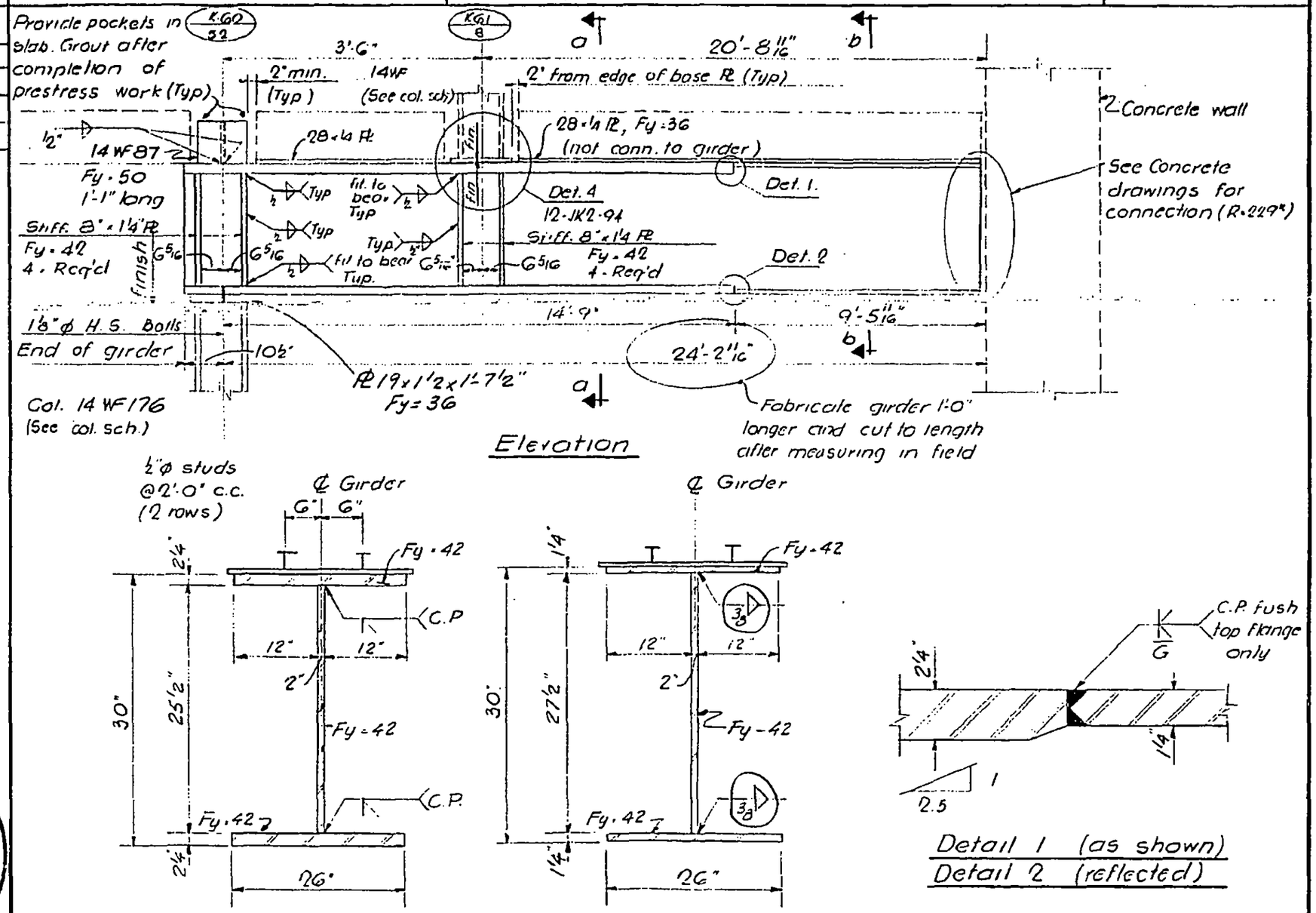

Elevation

Section a-a

Section b-b

Detail 1 (as shown)
Detail 2 (reflected)

Notes:
1. All welds to be E 70 xx
2. All bolts to be A325 friction type, unless shown
3. Col. cap Pl Det. similar to Det. 104 (10-JK2-7)

LICENSED PROFESSIONAL ENGINEER LESLIE E. ROBERTSON No. 34360 STATE OF NEW YORK

DRAWN A.F.
REVIEWED E.L.

12-JK2-96

SKILLING - HELLE - CHRISTIANSEN - ROBERTSON Structural & Civil Engineers

PROJECT THE WORLD TRADE CENTER | TITLE DETAIL OF PLATE GIRDER | DATE 6-11-68

REVISIONS

7-19-68

Provide pockets in slab. Grout after completion of prestress work (Typical)

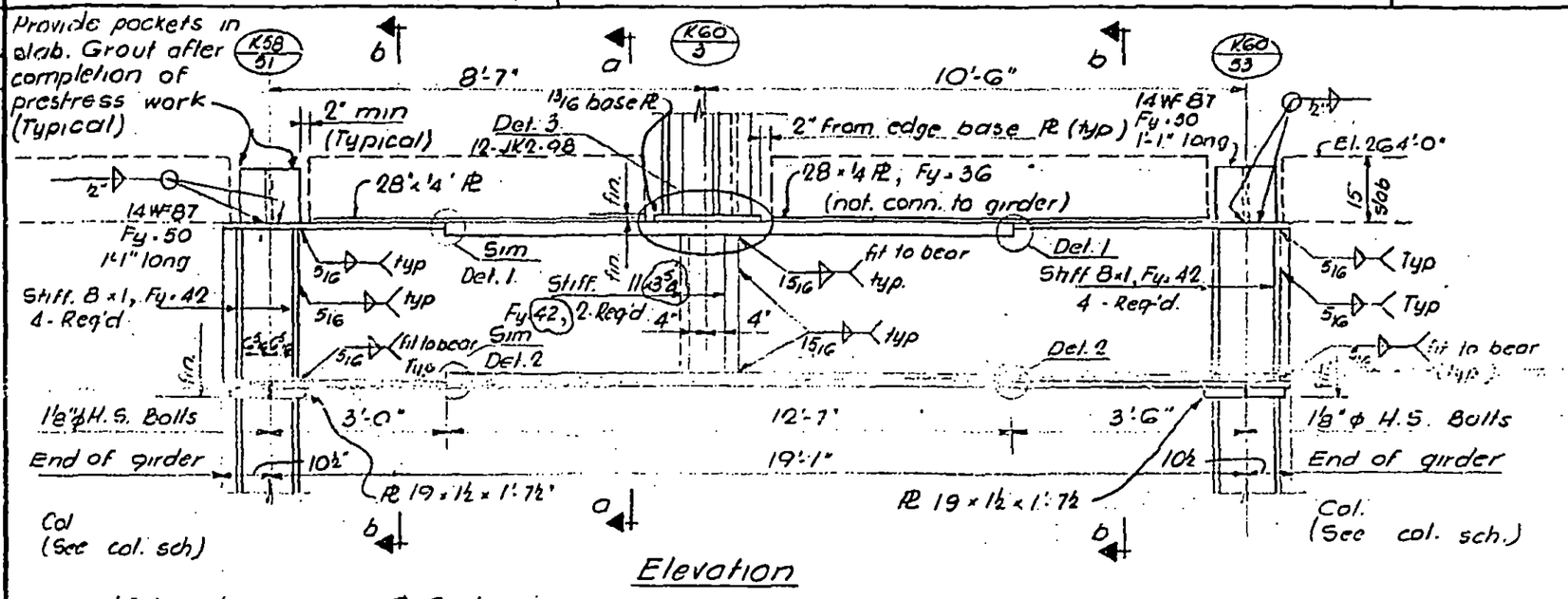

Elevation

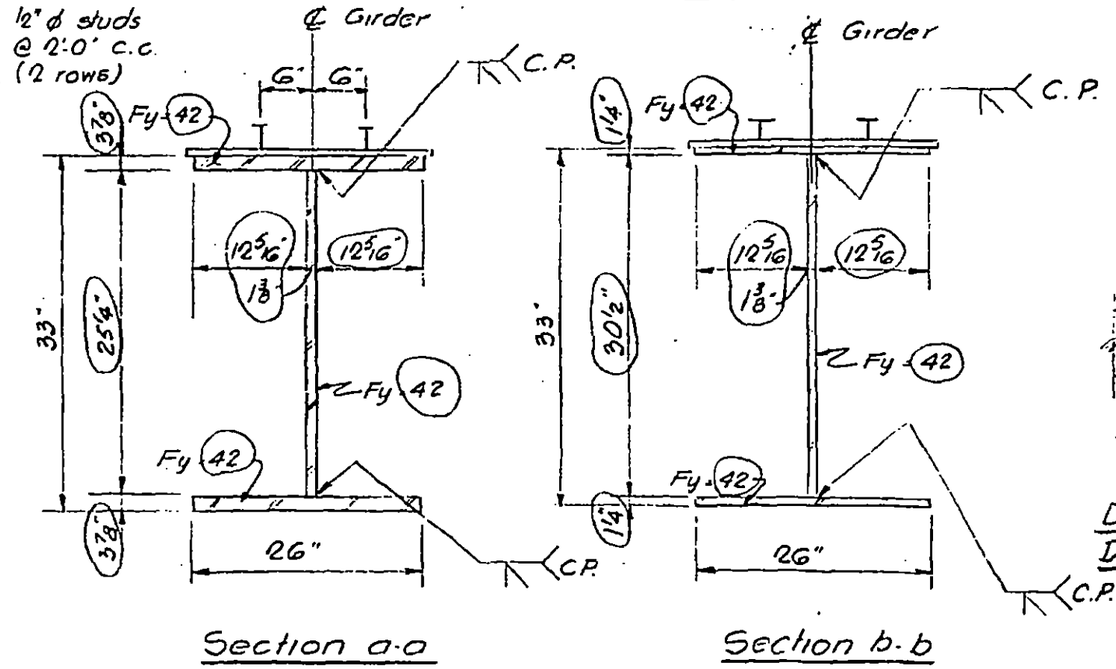

Section a-a Section b-b

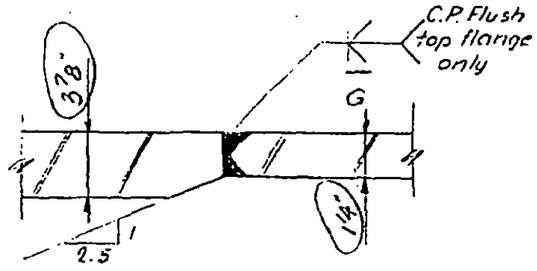

Detail 1 (as shown)
Detail 2 (reflected)

Notes

1. All welds to be E-70 xx
2. All bolts to be A 325 friction type, unless noted
3. Col. cap Pl Detail similar to Detail 104 (10-JK2-7)

12-JK2-97

LICENSED PROFESSIONAL ENGINEER LESLIE E. ROBERTSON No. 34360 UNIVERSITY OF THE STATE OF NEW YORK

SKILLING - HELLE - CHRISTIANSEN - ROBERTSON Structural & Civil Engineers

PROJECT THE WORLD TRADE CENTER | TITLE DETAIL OF PLATE GIRDER | DATE 6-11-68

REVISIONS

7-19-68

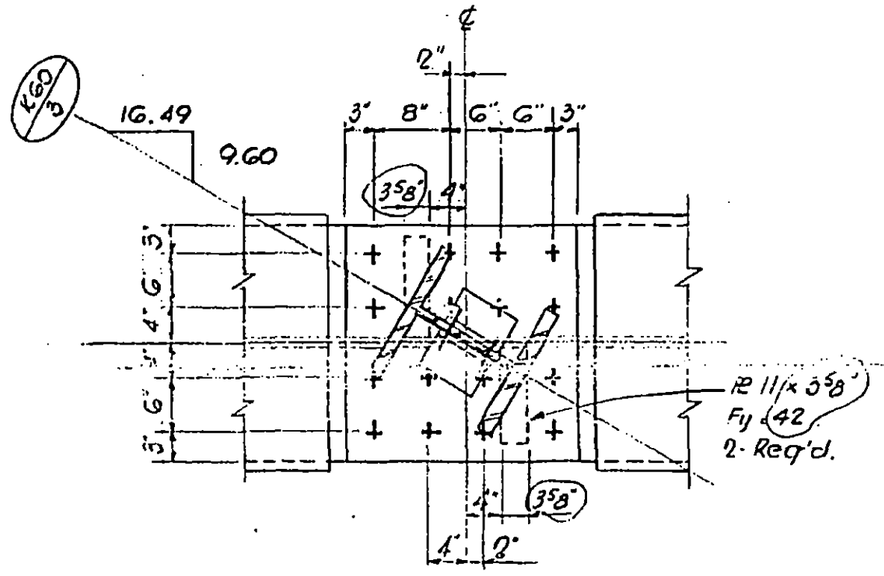

Detail 3

LICENSED PROFESSIONAL ENGINEER
LESLIE E. ROBERTSON
No. 34360
UNIVERSITY OF THE STATE OF NEW YORK

12-JK2-98

SKILLING, HELLE, CHRISTIANSEN, ROBERTSON — Structural & Civil Engineers

PROJECT THE WORLD TRADE CENTER | TITLE GIRDER DETAILS | DATE 4-18-69

REVISIONS

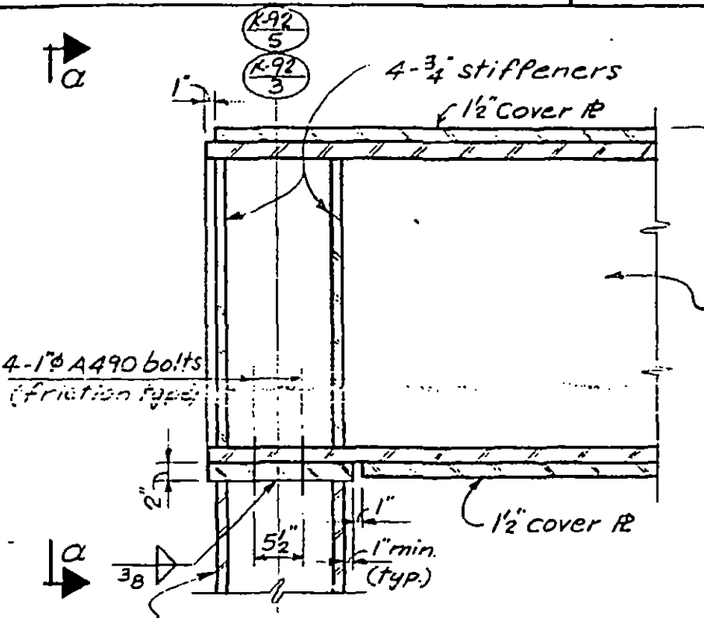

Detail 1

Detail 2 (opp. hand)

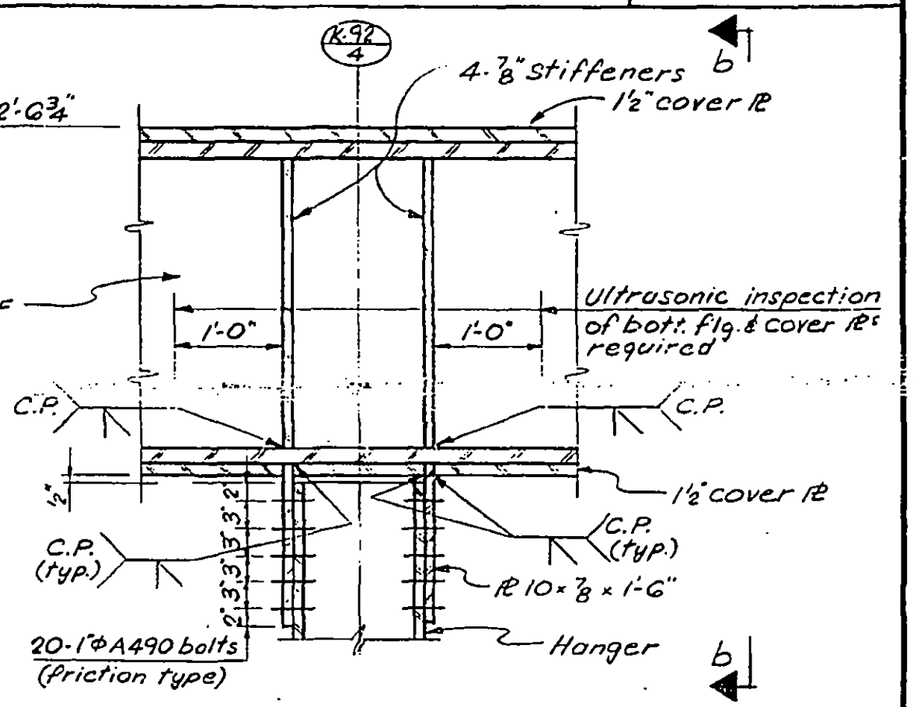

Detail 3

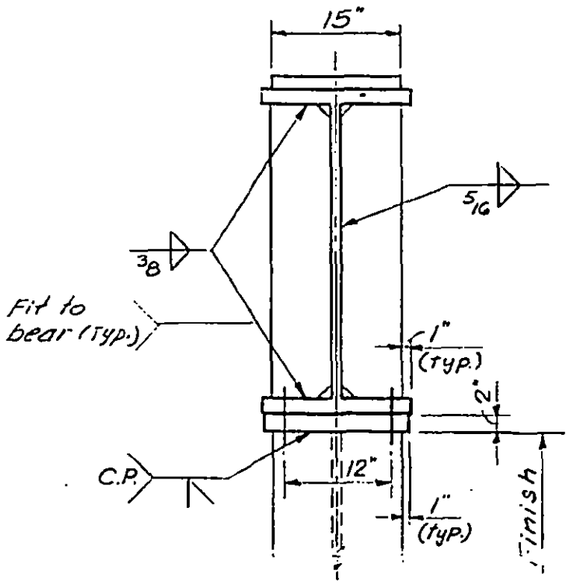

Section a-a

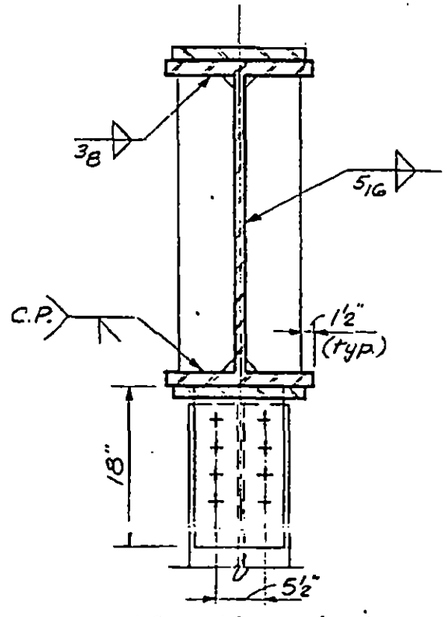

Section b-b

LICENSED PROFESSIONAL ENGINEER
LESLIE E. ROBERTSON
No. 34360
UNIVERSITY OF THE STATE OF NEW YORK

DESIGNED

DRAWN S.C.

REVIEWED E.L.

12-JK2-99

SKILLING - HELLE - CHRISTIANSEN - ROBERTSON Structural & Civil Engineers

PROJECT THE WORLD TRADE CENTER | TITLE PLATE GIRDER SCHEDULE | DATE 5-1-68

REVISIONS
6-28-68
7-19-68
11-5-68
1-8-69

Left end:-
1. Extreme end of ℄ Girder, or
2. ℄ of splice pl., or
3. ℄ of beam supporting the ℄ Girder.

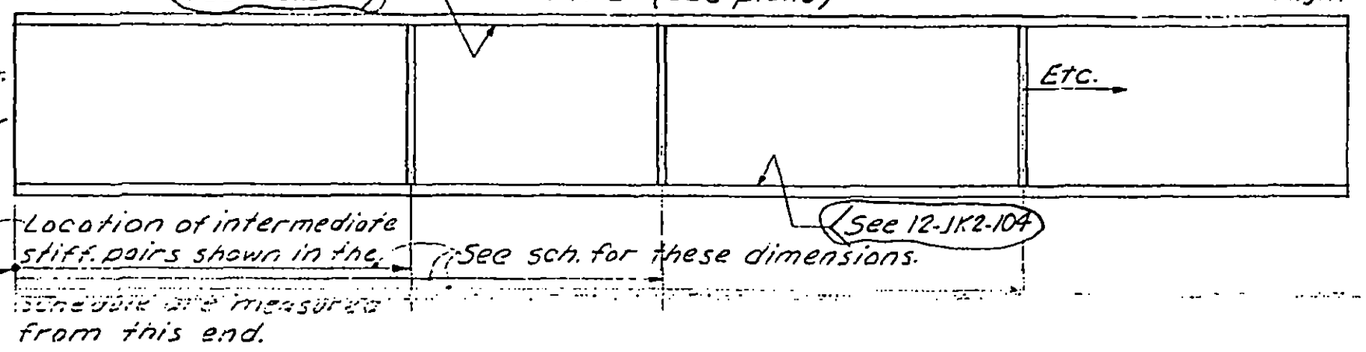

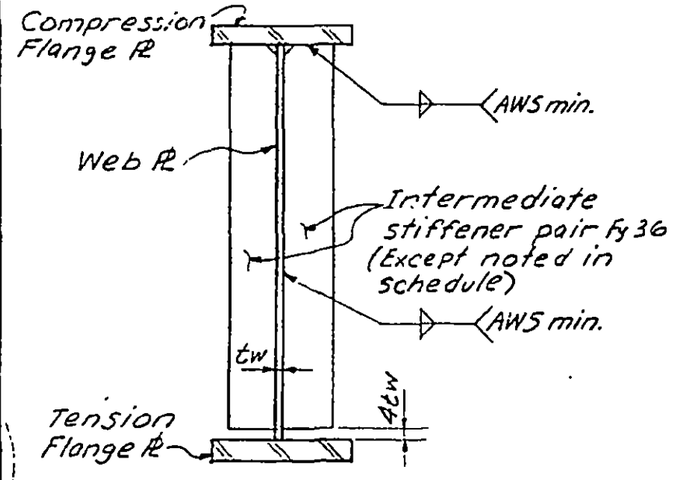

Typical Section

NOTES:

1. See 12-JK2-111 and 12-JK2-112 for typical connection details of beams framing to the girder.
2. Connection detail numbers at the base of columns supported by girders are shown on the plans.
3. Bearing stiffeners are shown on the Girder Connection Details and Column Connection Details.
4. Typical information shown on sketches may be altered by the "Remarks" column.

TYPE	Flange ℄s		Web ℄		Intermediate stiffener pairs		Left conn. Det.	Right conn. Det.	Remarks
	Size	Fy	Size	Fy	Size, ea.	Location			
J2A	30"x3"	42	50"x 7/8"	42	6"x 3/8" Fy=42	14", 86", 206", 446", 566", 666"	12-JK2-118	12-JK2-114	
J2B	28"x3	42	50"x 3/4"	42	6"x 3/8" Fy=42	45", 90", 180", 540", 630", 675"	12-JK2-115	12-JK2-116	
					[illegible] Fy=42	360			

DRAWN A.F.
REVIEWED E.L.

12-JK2-100

SKILLING - HELLE - CHRISTIANSEN - ROBERTSON Structural & Civil Engineers

PROJECT THE WORLD TRADE CENTER | TITLE PLATE GIRDER SCHEDULE (CONTINUED) | DATE 5-1-68

REVISIONS
7-19-68
9-4-68
10-15-68

TYPE	Flange Pls Size	Flange Pls Fy	Web Pl Size	Web Pl Fy	Intermediate stiffener pairs Size, eq.	Intermediate stiffener pairs Location	Left Conn. Det.	Right Conn. Det.	Remarks
J2C	44"x5"	42	52"x1 7/8"	42	none	—	12-JK2-117	12-JK2-118	
J2D	34"x5"	42	52"x1 3/8"	42	none	—	12-JK2-115	12-JK2-119	
J4A	44"x5"	42	52"x1 7/8"	42	none	—	12-JK2-120	12-JK2-117	
J4B	40"x3"	42	56"x1 5/8"	42	none	—	12-JK2-121	12-JK2-122	
J4C	32"x3"	42	48"x 5/8"	42	6"x 3/8" Fy=42	63";113";163";243";339";435";535";615"	12-JK2-123	12-JK2-124	
J4D		42							See 12-JK2-105
J4E	22"x3"	42	48"x1/4"	42	none	—	12-JK2-127	12-JK2-113 (Type B with A490 bolts)	
J4F	34"x2'2"	42	49"x1 5/8"	42	none	—	12-JK2-125	12-JK2-113 (Type B with A490 bolts)	
J4G	34"x2'2"	42	49"x1 5/8"	42	none	—	12-JK2-129	12-JK2-128 (Opp. Hand)	
J4H	24"x2'2"	42	51"x 7/8"	42	none	—	12-JK2-157	12-JK2-113 (Type D with A490 bolts)	
J4I	24"x2'2"	42	51"x 7/8"	42	none	—	12-JK2-129	12-JK2-128 (Opp. Hand)	
J4J	22"x2"	42	52"x 3/4"	42	6"x 3/8" Fy=42	90", 375"	12-JK2-133	12-JK2-129	"A"
					10"x 5/8" Fy=42	204", 261"			
J4K	22"x2"	42	52"x 3/4"	42	6"x 3/8" Fy=42	18", 360", 470"	12-JK2-113 (Type E with A490 bolts)	12-JK2-113 (Type F with A490 bolts)	
					10"x 5/8" Fy=42	132", 250", 408"			
J4L	22"x2"	42	52"x 3/4"	42	6"x 3/8" Fy=42	14", 40", 112", 187"	12-JK2-129	12-JK2-128 (Opp. Hand)	"A"
					10"x 5/8" Fy=42	298"			
J6A	24"x2"	36	52"x 3/4"	36	6"x 3/8"	75", 303", 417"	12-JK2-128	12-JK2-129	"A"
					10"x 5/8"	132", 189"			
J6B	20"x2 3/4"	36	50 1/2"x 3/4"	36	6"x 3/8"	250", 470"	12-JK2-113 (Type E)	12-JK2-113 (Type H)	
					10"x 5/8"	18", 132", 408"			
J6C	20"x2 3/4"	36	50 1/2"x 3/4"	36	6"x 3/8"	14", 42", 114"	12-JK2-129	12-JK2-134	"A"
					10"x 5/8"	189", 300"			
J6D	22"x2"	36	52"x 1/2"	36	6"x 3/8"	126";183";297";326";395";436"	12-JK2-128	12-JK2-129	"A"
					10"x 5/8"	69";240"			
J6E	22"x2"	36	52"x 1/2"	36	6"x 3/8"	18", 75", 132", 415", 470"	12-JK2-113 (Type G)	12-JK2-113 (Type G)	
					10"x 5/8"	250", 360"			
J6F	22"x2"	36	52"x 1/2"	36	6"x 3/8"	14", 55", 151", 318"	12-JK2-129	12-JK2-130	"A"
					10"x 5/8"	207"			
J6G	26"x2"	36	52"x 3/4"	36	6"x 3/8"	75", 189", 303", 401", 442"	12-JK2-128	12-JK2-129	"A"
					10"x 5/8"	246"			

See 12-JK2-100 For sketches and General notes.

"A" - Intermediate stiffeners to be welded to both top & bottom flanges. (A.W.S. min. welds)

12-JK2-101

LICENSED PROFESSIONAL ENGINEER
LESLIE E. ROBERTSON
No. 34360
UNIVERSITY OF THE STATE OF NEW YORK

SKILLING - HELLE - CHRISTIANSEN - ROBERTSON Structural & Civil Engineers

PROJECT THE WORLD TRADE CENTER | TITLE PLATE GIRDER SCHEDULE (CONTINUED) | DATE 5-1-68

REVISIONS
6-7-68
7-19-68
8-30-68
10-15-68
11-5-68
1-20-69

TYPE	Flange PLs Size	Fy	Web PL Size	Fy	Intermediate stiffener pairs Size, ea.	Location	Left Conn. Det.	Right Conn. Det.	Remarks
J6H	26"x2½"	36	51"x¾"	36	6"x⅜"	18", 75", 360", 525"	12-JK2-113 (Type E)	12-JK2-128 (Opp. hand)	
					10"x⅝"	132", 250", 470"			
J6I	20"x1¾"	36	52½"x¾"	36	6"x⅜"	75", 246", 303", 406"	12-JK2-128	12-JK2-129	"A"
					10"x⅝"	132"			
J6J	20"x1¾"	36	52½"x¾"	36	6"x⅜"	14", 168", 286", 506"	12-JK2-113 (Type F)	12-JK2-113 (Type G)	
					10"x⅝"	54", 396"			
J6K	20"x1¾"	36	52½"x¾"	36	6"x⅜"	14", 55", 207", 319"	12-JK2-129	12-JK2-130	"A"
J6L	24"x1¼	36	52½"x⅝"	36	6"x⅜"	132", 303", 401", 442"	12-JK2-128A	12-JK2-129	"A"
					10"x⅝"	246"			
J6M	24"x1¾"	36	52½"x⅝"	36	6"x⅜"	132", 470"	12-JK2-113 (Type G)	12-JK2-113 (Type G)	
					10"x⅝"	18", 250", 360"			
J6N	24"x1¾"	36	52½"x⅝"	36	6"x⅜"	14", 49", 139", 306"	12-JK2-129	12-JK2-130	"A"
					10"x⅝"	183 1/16			
J6O	26"x4"	36	48"x1⅜"	36	None	—	12-JK2-134	12-JK2-130	
J6P	26"x4"	36	48"x1⅜"	36	None	—	12-JK2-113 (Type J)	12-JK2-113 (Type J)	
J6Q	26"x4"	36	48"x1⅜"	36	None	—	12-JK2-130	12-JK2-130	
J2E	20"x2½"	42	45"x¾"	42	8"x½" Fy=42	38.5", 72.5", 134.5", 168.5", 253.5", 301.5"	12-JK2-131	12-JK2-132	SEE 12-JK2-106 FOR BRACING DETAIL
					8"x1" Fy=42	50.5", 60.5", 146.5", 156.5"			
J2F	28"x2¾"	42	50½"x1"	42	None		12-JK2-135	12-JK2-119A	FL.=10"x3" from N5166.50 to North end. See 12-JK2-118A for detail of hanger at J3-13
J2G	22"x2"	42	52"x¾"	42	10"x⅜"	132", 252"	12-JK2-121	12-JK2-116	
J2H	26"x2½"	36	65"x1"	36	None		12-JK2-128	12-JK2-136	Bm. conn. @ both ends 12-JK2-113 type K
J2I	22"x2½"	36	65"x¾"	36	6"x⅜"	116", 296"	12-JK2-137	12-JK2-128	Col. Conn. 12-JK2-148. Bm. conn @ both ends 12-JK2-113 type L
J4M	16"x1½"	36	44"x½"	36	None		190 kips.	190 kips	
J4N	22"x2"	36	66"x¾"	36	None		338 kips.	12-JK2-138	Col. Conn. 12-JK2-148
J2J	24"x2"	42	52"x¾"	42	10"x⅜"	96", 186", 276", 366", 456"	12-JK2-116	12-JK2-121	

LICENSED PROFESSIONAL ENGINEER LESLIE E. ROBERTSON No. 24960 STATE OF NEW YORK

DRAWN S.C.
REVIEWED E.L.

See 12-JK2-100 For sketches and General notes.

Where connection reaction in kips are given, use standard A15C connection.
"A" - Intermediate stiffeners to be welded to both top & bottom flanges. (A.W.S. min. welds)

12-JK2-102

SKILLING - HELLE - CHRISTIANSEN - ROBERTSON Structural & Civil Engineers

PROJECT THE WORLD TRADE CENTER | TITLE PLATE GIRDER SCHEDULE (CONTINUED) | DATE 6-7-68

REVISIONS
9-4-68
10-15-68
3-17-69

TYPE	Flange PL's Size	Fy	Web PL Size	Fy	Intermediate Stiffener Pairs Size Ea.	Location	Left Conn. Det.	Right Conn. Det	Remarks
K2A	24"x 2"	36	52"x 3/4"	36	6"x 3/8"	78", 318", 410", 448"	12-JK2-128	12-JK2-129	"A"
					10"x 5/8"	138", 198", 258",			
K2B	24"x 2"	36	52"x 3/4"	36	6"x 3/8"	87", 429",	12-JK2-113 (TYPE E)	12-JK2-113 (TYPE E)	.
					10"x 5/8"	30", 144", 258", 372", 486"			
K2C	24"x 2"	36	52"x 3/4"	36	6"x 3/8"	14", 52", 132", 364"	12-JK2-129	12 JK2-128 (OPP. HAND)	"A"
					10"x 5/8"	210", 304"			
K2D	24"x 2"	36	52"x 3/4"	36	6"x 3/8"	78", 258", 318", 436",	12-JK2-141	12-JK2-129	"A"
					10"x 5/8"	138",			
K2E	24"x 2"	36	52"x 3/4	36	6"x 3/8"	99", 441"	12-JK2-113 (TYPE H)	12-JK2-113 (TYPE E)	
					10"x 5/8"	42", 156", 270", 384", 498"			
K2F	24"x 2"	36	52"x 3/4"	36	6"x 3/8"	14", 52", 132", 364"	12-JK2-129	12-JK2-128 (OPP HAND)	"A"
					10"x 5/8"	210", 304"			
K2G	26"x 2"	36	52"x 3/4"	36	6"x 3/8"	78", 318", 414", 460",	12-JK2-149	12-JK2-129	"A"
					10"x 5/8"	138" 258"			
K2H	26"x 2 1/2"	36	51"x 3/4"	36	6"x 3/8"	75", 417",	12-JK2-113 (TYPE E)	12-JK2-113 (TYPE E)	
					10"x 5/8"	18", 132", 246", 360", 474",			
K2I	26"x 2"	36	52"x 3/4	36	6"x 3/8"	14", 60", 162", 294", 360",	12-JK2-139	12-JK2-140	"A"
					10"x 5/8"	206",			
K2J	28"x 3 1/4"	36	49 1/2"x 7/8"	36	8"x 1/2"	90", 234", 522",	12-JK2-140	12-JK2-113 (TYPE M)	
					10"x 5/8"	162", 306", 378", 450",			
K2K	26"x 2 1/2"	36	51"x 7/8"	36	8"x 1/2"	18", 126",	12-JK2-129	12-JK2-133	"A"
					10"x 5/8"	198", 450",			
K2L	24"x 2 1/2"	36	51"x 3/4"	36	6"x 3/8"	48", 120", 276", 420", 468	12-JK2-139	12-JK2-113 (TYPE E)	
					10"x 5/8"	192", 360",			
K2M	24"x 2 1/2"	36	51"x 3/4"	36	6"x 3/8"	18", 66", 174", 318", 402", 534",	12-JK2-129	12-JK2-128 (OPP. HAND)	"A"
					10"x 5/8"	234", 486",			
J4P	22"x 3"	42	50"x 3/4"	42	6"x 3/8"	402"	12-JK2-121A	12-JK1-35	
J4Q	20"x 3"	42	50"x 3/4"	42	6"x 3/8"	390"	12-JK2-145	12-JK2-121	
K5A	26"x 3 1/2"	42	53"x 3/4"	42	6"x 3/8"	270", 390"	12-JK2-121	12-JK2-147	See 12-JK2-146 for Angel of K5A-5.

LICENSED PROFESSIONAL ENGINEER
LESLIE E. ROBERTSON
No. 34360
UNIVERSITY OF THE STATE OF NEW YORK

DRAWN C.C.
REVIEWED E.L.

See 12-JK2-100 FOR SKETCHES AND GENERAL NOTES.

"A" - INTERMEDIATE STIFFENERS TO BE WELDED TO BOTH TOP & BOTTOM FLANGES. (A.W.S. MIN)

12-JK2-103

SKILLING, HELLE, CHRISTIANSEN, ROBERTSON — Structural & Civil Engineers

PROJECT THE WORLD TRADE CENTER | TITLE PLATE GIRDER WELDING SCHEDULE | DATE 1-8-69

REVISIONS

GIRDER TYPE	WELD DETAIL	WELD a
J2A	1	1/2
J2B	1	1/2
J2C	2	7/8
J2D	3	
J2E	*1	1/2
J2F	2	5/8
J2G	1	3/8
J2H	1	1/2
J2I	1	1/2
J2J	1	1/2
J4A	3	
J4B	2	3/4
J4C	1	1/2
J4D	See 12-JK2-105	
J4E	3	
J4F	2	3/4
J4G	2	3/4
J4H	1	5/8
J4I	1	5/8

GIRDER TYPE	WELD DETAIL	WELD a
J4J	1	1/2
J4K	1	5/8
J4L	1	5/8
J4M	1	3/8
J4N	1	3/8
J4P	1	1/2
J4Q	1	5/8
J6A	1	3/8
J6B	1	1/2
J6C	1	1/2
J6D	1	3/8
J6E	1	3/8
J6F	1	3/8
J6G	1	3/8
J6H	1	1/2
J6I	1	3/8
J6J	1	3/8
J6K	1	3/8
J6L	1	3/8

GIRDER TYPE	WELD DETAIL	WELD a
J6M	1	3/8
J6N	1	3/8
J6O	2	5/8
J6P	2	5/8
J6Q	2	1/2
K2A	1	3/8
K2B	1	5/8
K2C	1	3/8
K2D	1	1/2
K2E	1	1/2
K2F	1	3/8
K2G	1	3/8
K2H	1	1/2
K2I	1	3/8
K2J	1	5/8
K2K	1	1/2
K2L	1	1/2
K2M	1	1/2
K5A	1	1/2

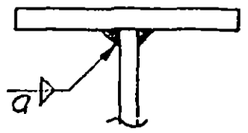

WELD DETAIL 1

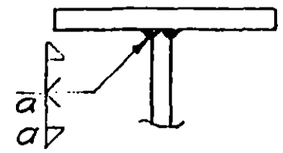

WELD DETAIL 2

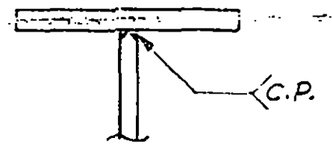

WELD DETAIL 3

NOTES:

1. Welding Electrodes to be E70XX.
2. This schedule is intended to show typical web-flange welding. Welds shown in detail on 12-JK2-105 to 158 shall apply for portion of girder shown.
3. Where column bears on girder from above or below, fit web to bear on loaded flange for length of 2'-0", unless weld detail 3 is called for. Complete penetration weld may be used as an option to fitting of web.
4. * — Complete penetration weld between web & top flange thru-out.

LICENSED PROFESSIONAL ENGINEER — LESLIE E. ROBERTSON — No. 34360 — UNIVERSITY OF THE STATE OF NEW YORK

DESIGNED

DRAWN S.T.M.

REVIEWED E.L.

12-JK2-104